CEAM015900

Operation & Maintenance Manual

930E-3

DUMP TRUCK

SERIAL NUMBERS **A30364 & UP**

KOMATSU®

NOTES:

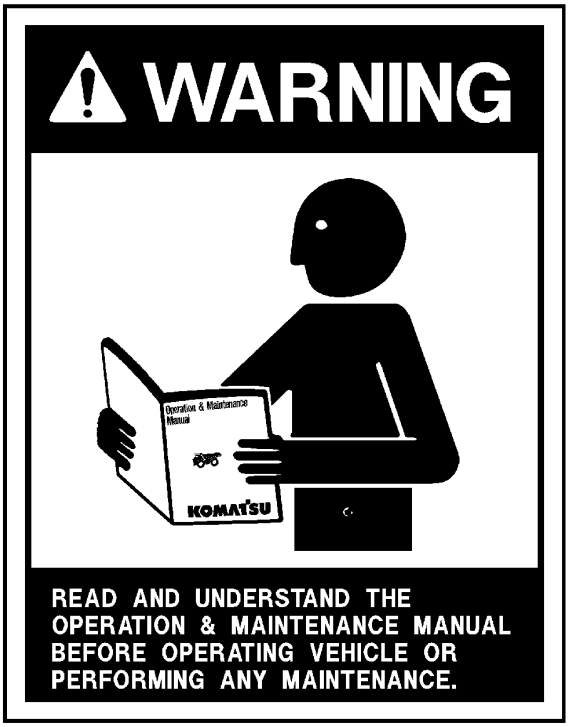

Unsafe use of this machine may cause serious injury or death. Operators and maintenance personnel must read and understand this manual before operating or maintaining this machine.

This manual should be kept in or near the machine for reference, and periodically reviewed by all personnel who will come into contact with it.

This material is proprietary to Komatsu America Corp (KAC), and is not to be reproduced, used, or disclosed except in accordance with written authorization from KAC.

It is the policy of the Company to improve products whenever it is possible and practical to do so. The Company reserves the right to make changes or add improvements at any time without incurring any obligation to install such changes on products sold previously.

Because of continuous research and development, periodic revisions may be made to this publication. Customers should contact their local Komatsu distributor for information on the latest revision.

CALIFORNIA
Proposition 65 Warning

Diesel engine exhaust, some of its constituents, and certain vehicle components contain or emit chemicals known to the State of California to cause cancer, birth defects or other reproductive harm.

CALIFORNIA
Proposition 65 Warning

Battery posts, terminals and related accessories contain lead and lead compounds, chemicals known to the State of California to cause cancer and birth defects or other reproductive harm. Wash hands after handling.

⚠WARNING

NON-OEM PARTS IN CRITICAL SYSTEMS

For safety reasons, Komatsu America Corp. strongly recommends against the use of non-OEM replacement parts in critical systems of all Komatsu equipment. Critical systems include but are not limited to steering, braking and operator safety systems.

Replacement parts manufactured and supplied by unauthorized sources may not be designed, manufactured or assembled to Komatsu's design specifications; accordingly, use of such parts may compromise the safe operation of Komatsu products and place the operator and others in danger should the part fail.

Komatsu is also aware of repair companies that will rework or modify an OEM part for reuse in critical systems. Komatsu does not generally authorize such repairs or modifications for the same reasons as noted above.

Use of non-OEM parts places full responsibility for the safe performance of the Komatsu product on the supplier and user. Komatsu will not in any case accept responsibility for the failure or performance of non-OEM parts in its products, including any damages or personal injury resulting from such use.

EMISSION CONTROL WARRANTY

EMISSION CONTROL WARRANTY STATEMENT (APPLIES TO CANADA ONLY)

1. Products Warranted

Komatsu America International Company, Komatsu Mining Systems Inc. and Komatsu Utility Corporation (collectively "Komatsu") produce and/or market products under brand names of Komatsu, Dresser, Dressta, Haulpak and Galion. This emissions warranty applies to new engines bearing the Komatsu name installed in these products and used in Canada in machines designed for industrial off-highway use. This warranty applies only to these engines produced on or after January 1, 2000. This warranty will be administered by Komatsu distribution in Canada.

2. Coverage

Komatsu warrants to the ultimate purchaser and each subsequent purchaser that the engine is designed, built and equipped so as to conform, at the time of sale by Komatsu, with all U.S. Federal emission regulations applicable at the time of manufacture and that it is free from defects in workmanship or material which would cause it not to meet these regulations within five years or 3,000 hours of operation, whichever occurs first, as measured from the date of delivery of the engine to the ultimate purchaser.

3. Limitations

Failures, other than those resulting from defects in materials or workmanship, are not covered by this warranty. Komatsu is not responsible for failures or damage resulting from what Komatsu determines to be abuse or neglect, including, but not limited to: operation without adequate coolant or lubricants; over fueling; over speeding; lack of maintenance of lubricating, cooling or intake systems; improper storage, starting, warm-up, run-in or shutdown practices; unauthorized modifications of the engine. Komatsu is also not responsible for failures caused by incorrect fuel or by water, dirt or other contaminants in the fuel. Komatsu is not responsible for non-engine repairs, "downtime" expense, related damage, fines, all business costs or other losses resulting from a warrantable failure.

KOMATSU IS NOT RESPONSIBLE FOR INCIDENTAL OR CONSEQUENTIAL DAMAGES.

This warranty, together with the express commercial warranties, are the sole warranties of Komatsu. **THERE ARE NO OTHER WARRANTIES, EXPRESS OR IMPLIED, OR OF MERCHANTABILITY OR FITNESS FOR A PARTICUALR PURPOSE.**

GARANTIE SUR LE CONTRÔLE DES ÉMISSIONS

ÉNONCÉ DE GARANTIE SUR LE CONTRÔLE DES ÉMISSIONS (APPLICABLE AU CANADA SEULEMENT):

1. Produits garantis:

Komatsu America International Company, Komatsu Mining Systems Inc. et Komatsu Utility Corporation (collectivement Komatsu) produisent et/ou font la mise en marché de produits portant les noms de marque Komatsu, Dresser, Dressta, Haulpak et Galion. Cette garantie sur les émissions s'applique à tous les nouveaux moteurs portant le nom Komatsu, installés dans ces produits et utilisés au Canada dans des machines conçues pour utilisation industrielle non-routière. Cette garantie s'applique seulement sur les moteurs produits à partir du 1er Janvier 2000. Cette garantie sera administrée par la distribution de Komatsu au Canada.

2. Couverture:

Komatsu garantit à l'acheteur ultime et chaque acheteur subséquent que le moteur est conçu, construit et équipé en toute conformité, au moment de la vente par Komatsu, avec toutes les Réglementations fédérales américaines sur les émissions applicables au moment de la fabrication et qu'il est exempt de défauts de construction ou de matériaux qui auraient pour effet de contrevenir à ces réglementations en dedans de 5 ans ou 3000 heures d'opération, mesuré à partir de la date de livraison du moteur au client ultime.

3. Limitations:

Les bris, autres que ceux résultant de défauts de matériaux ou de construction, ne sont pas couverts par cette Garantie. Komatsu n'est pas responsable pour bris ou dommages résultant de ce que Komatsu détermine comme étant de l'abus ou négligence, incluant mais ne se limitant pas à: l'opération sans lubrifiants ou agent refroidissants adéquats; la suralimentation d'essence; la survitesse; le manque d'entretien des systèmes de lubrification, de refroidissement ou d'entrée; de pratiques non-propices d'entreposage, de mise en marche, de réchauffement, de conditionnement ou d'arrêt; les modifications non-autorisées du moteur. De plus, Komatsu n'est pas responsable de bris causés par de l'essence inadéquate ou de l'eau, des saletés ou autres contaminants dans l'essence. Komatsu n'est pas responsable des réparations non-reliées au moteur, des dépenses encourues suite aux temps d'arrêts, des dommages relatifs, amendes, et de tout autre coût d'affaires ou autres pertes résultant d'un bris couvert par la garantie.

KOMATSU N'EST PAS RESPONSABLE DES INCIDENTS OU DOMMAGES CONSÉQUENTS.

Cette garantie, ainsi que les garanties expresses commerciales, sont les seules garanties de Komatsu. **IL N'Y A AUCUNE AUTRE GARANTIE, EXPRESSE OU SOUS-ENTENDUE, MARCHANDABLE OU PROPICE A UNE UTILISATION PARTICULIÈRE.**

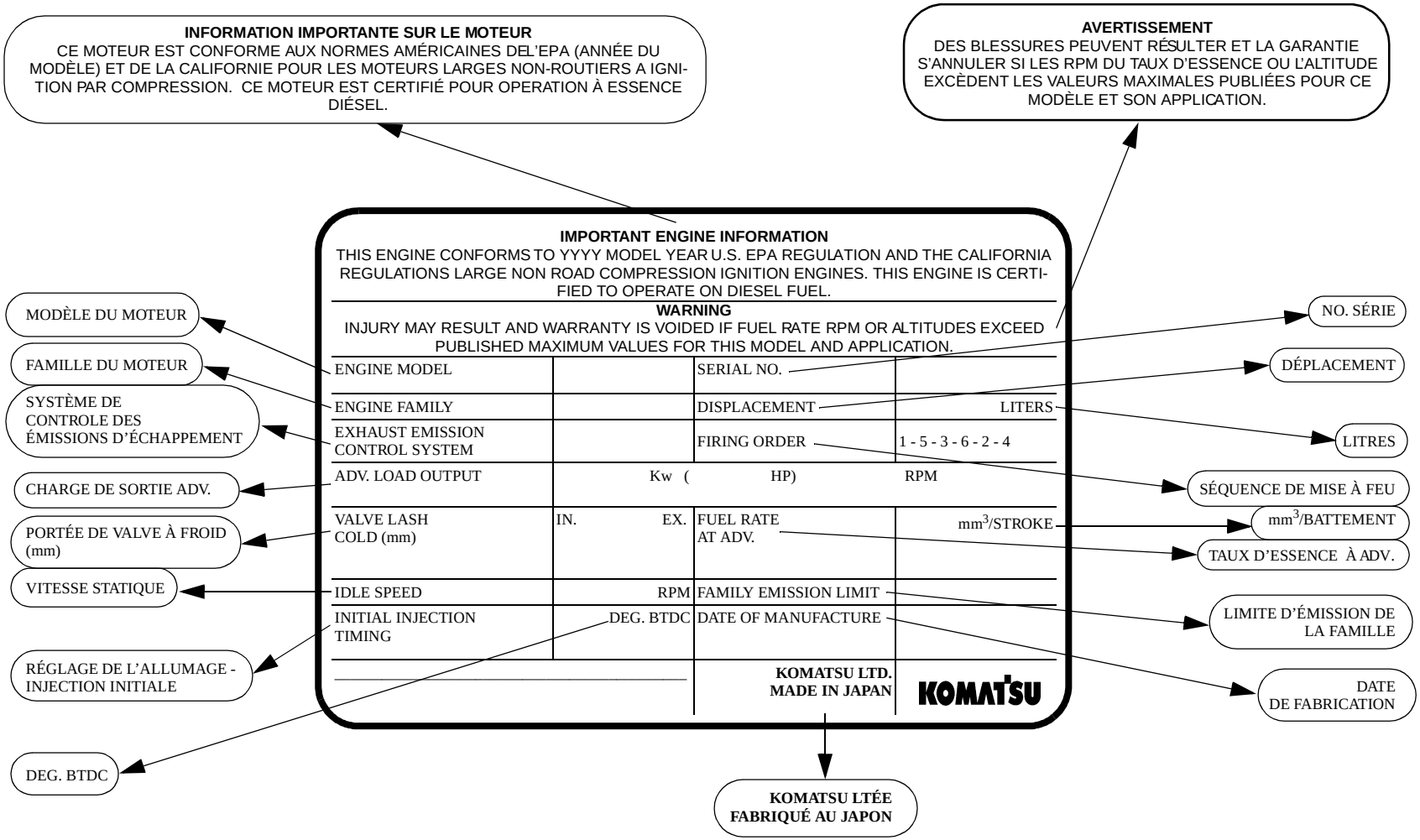

ENGINE DATAPLATE - ENGLISH / FRENCH

INTRODUCTION

FOREWORD

This manual is written for use by the operator and/or the service technician and is designed to help these persons to become fully knowledgeable of the truck and all its systems in order to keep it operating safely and efficiently. All operators and maintenance personnel should read and understand the materials in this manual before operating the truck or performing maintenance and/or operational checks on the truck. All safety notices, warnings and cautions should be understood and followed when operating or accomplishing repairs on the truck.

A product identification plate is located on the frame in front of the right side front wheel and designates the Truck Model Number, Product Identification Number (vehicle serial number), and Maximum GVW (Gross Vehicle Weight) rating.

The KOMATSU Truck Model designation consists of three numbers and one letter (i.e. 930E).

The three numbers represent the basic truck model.

The letter “M”, when present, designates a Mechanical drive system;

The letter “E”, when present, designates an Electrical wheel motor drive system.

The Product Identification Number (vehicle serial number) contains information which will identify the original manufacturing bill of material for this unit. This complete number will be necessary for proper ordering of many service parts and/or warranty consideration.

The Gross Vehicle Weight (GVW) is what determines the load on the drive train, frame, tires, and other components. **The vehicle design and application guidelines are sensitive to the total maximum Gross Vehicle Weight (GVW). GVW is TOTAL WEIGHT: the Empty Vehicle Weight + the fuel & lubricants + the payload.**

To determine allowable payload, fill all lubricants to the proper level and fill the fuel tank of an empty truck (which includes all accessories, body liners, tailgates, etc.), and then weigh the truck. Record this value and subtract it from the GVW. The result is the *allowable payload*.

NOTE: Accumulations of mud, frozen material, etc., become part of the GVW and reduces allowable payload. To maximize payload and to keep from exceeding the GVW rating, these accumulations should be removed as often as practical.

Exceeding the allowable payload will reduce the expected life of truck components.

⚠WARNING

Unsafe use of this machine may cause serious injury or death. Operators and maintenance personnel must read this manual before operating or maintaining this machine. This manual should be kept in or near the machine for reference and periodically reviewed by all personnel who come in contact with it.

TRUCK MODEL ILLUSTRATION

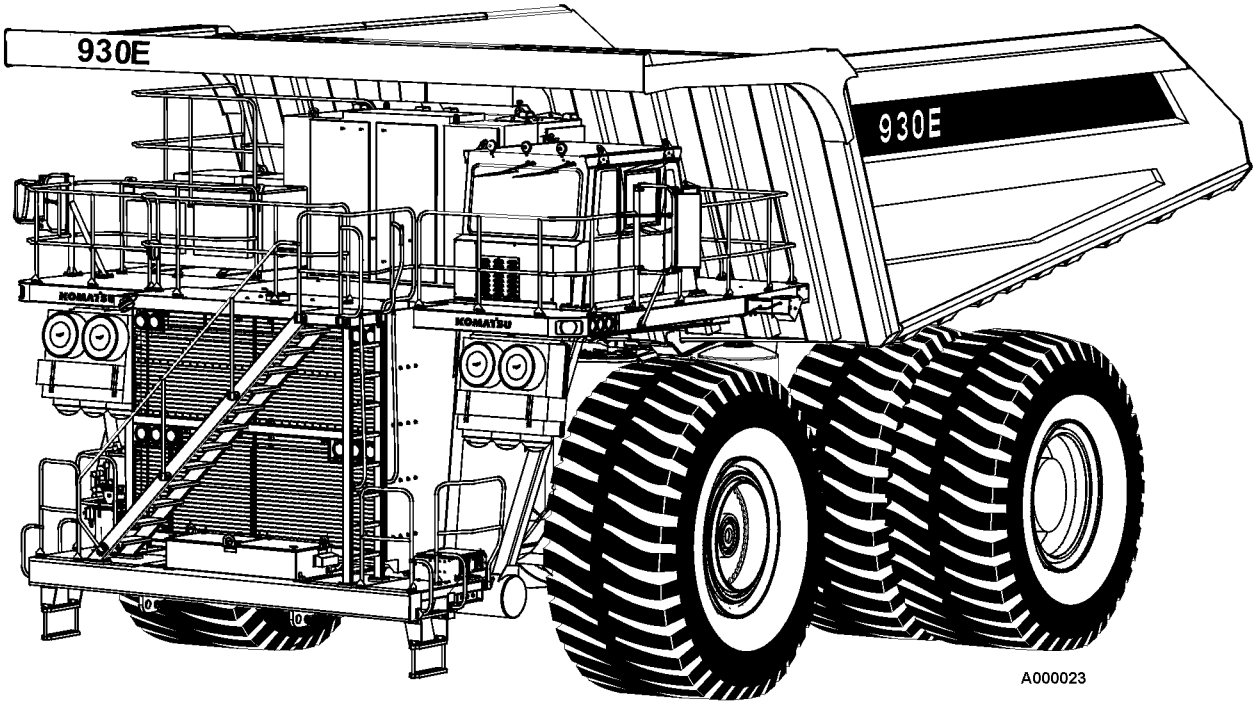

ABOUT THIS MANUAL

The front cover of this manual includes a form number. This form number should be referenced when ordering additional copies of this manual or for any other correspondence regarding the coverage in this manual.

Direct all inquiries to:

Komatsu America Corp.
Datakom, Peoria Technical Publications
P.O. Box 240
Peoria, IL 61650-0240
United States of America
Fax (309) 672-7072

This first section is an Introduction to the manual. It contains the Table of Contents for locating specific areas of interest. Other sections include:

- Standard Charts and Tables
- Safety
- Warnings and Cautions
- Operating Instructions
- Operator Cab and Controls
- Lubrication and Service
- Automatic Lubrication System
- Major Component Descriptions/Specifications
- Payload Meter III
- Radio, AM/FM Stereo Cassette

When searching for a specific area of interest, go first to the Table of Contents to locate the section in which the subject might generally be included. Then, go to that section of the Table of Contents to find a subject description that most closely describes the specific area of interest to find a page number and go to that page. Section numbers and page numbers are located at the top, outside corner of the page.

At the top, inside corner of the page is a document (module) number. If there is ever a question regarding the information in a particular section, refer to the document (module) number, the manual form number, and use the address shown above to correspond. If there is a date (month/year) behind the document (module) number, that date indicates the latest revision date of that page.

The illustrations used in this manual are *TYPICAL* of the component shown and may not be an *exact* reproduction of what is found on the truck.

This manual shows dimensioning of U.S. standard and metric (SI) units throughout. All references to “right”, “left”, “front” or “rear” are made with respect to the operator's normal seated position unless specifically stated otherwise.

When assembly instructions are provided without references to torque values, standard torque values should be used. Standard torque requirements are shown in torque charts on the following pages of the next section and in the General Information section of the truck shop manual. Individual torques, when provided in the text, are in bold face type, such as **100 ft.lbs. (135 N•m)**. All torque specifications have ±10% tolerance unless otherwise specified.

ALERTS PAGE

This ALERT symbol is used in this manual, along with the signal words "CAUTION", "DANGER" and "WARNING", to alert the reader to hazards arising from improper operating and maintenance practices.

DANGER

"DANGER" identifies a specific potential hazard
WHICH WILL RESULT
in either INJURY OR DEATH
if proper precautions are not taken.

WARNING

"WARNING" identifies a specific potential hazard
WHICH COULD RESULT
in either INJURY OR DEATH
if proper precautions are not taken.

CAUTION

"CAUTION" is used for general reminders
of proper safety practices
OR
to direct the reader's attention to avoid unsafe
or improper practices which may result
in damage to the equipment.

TABLE OF CONTENTS

INTRODUCTION 10-1
FOREWARD 10-1
TRUCK MODEL ILLUSTRATION 10-2
ABOUT THIS MANUAL. 10-3
ALERTS PAGE 10-4
TABLE OF CONTENTS 10-5

STANDARD CHARTS AND TABLES. 12-1

GENERAL SAFETY 20-1
Safety Rules 20-1
Truck Safety Features 20-1
Clothing And Personal Items 20-1
Unauthorized Modification 20-1
Leaving The Operator’s Seat 20-1
Mounting And Dismounting 20-1
Fire Extinguishers And First Aid Kits 20-2
Precautions For High Temperature Fluids 20-2
Asbestos Dust Hazard Prevention 20-2
Fire Prevention For Fuel And Oil 20-2
ROPS Precautions 20-3
Preventing Injury From Work Equipment 20-3
Precautions For Optional Attachments 20-3
Precautions When Starting The Machine 20-3
PRECAUTIONS FOR TRUCK OPERATION 20-4
Safety Is Thinking Ahead 20-4
Safety At The Worksite 20-4
Fire Prevention 20-4
Preparing For Operation 20-4
Ventilation For Enclosed Areas 20-4
Mirrors, Windows, And Lights 20-4
In The Operator’s Cab - Before Starting The Engine 20-5
OPERATING THE MACHINE 20-5
Starting The Engine 20-5
Truck Operation - General 20-5
Traveling In The Truck 20-6
Precautions When Traveling In Reverse 20-6
Traveling On Slopes 20-6
Ensuring Good Visibility 20-7
Operating On Snow 20-7
Avoid Damage To The Dump Body 20-7
Driving Near High Voltage Cables 20-7

TABLE OF CONTENTS (cont.)

When Loading The Truck 20-7
When Dumping 20-7
Working On Loose Ground 20-7
Parking The Machine 20-8
TOWING 20-8
WORKING NEAR BATTERIES 20-8
Jump Starting With Booster Cables 20-8

PRECAUTIONS FOR MAINTENANCE 20-9
BEFORE PERFORMING MAINTENANCE 20-9
Stopping The Engine Before Service 20-9
Warning Tag 20-9
Proper Tools 20-9
Securing The Dump Body 20-9
DURING MAINTENANCE 20-10
Personnel 20-10
Attachments. 20-10
Working Under The Machine 20-10
Keeping The Machine Clean 20-10
Rules To Follow When Adding Fuel Or Oil 20-10
Radiator Coolant Level 20-10
Use Of Lighting 20-10
Precautions With The Battery 20-11
Handling High Pressure Hoses 20-11
Precautions With High Pressure Oil 20-11
Maintenance Near High Temperatures And High Pressures 20-11
Rotating Fan And Belts 20-11
Waste Materials 20-11
TIRES 20-12
Handling Tires 20-12
Storing Tires After Removal 20-12

ADDITIONAL JOB SITE RULES 20-13

WHEN REPAIRS ARE NECESSARY 20-14

SPECIAL PRECAUTIONS FOR WORKING ON A 930E TRUCK 20-15
Preliminary Procedures before Welding or Performing Maintenance 20-15
Normal Engine Shutdown Procedure 20-15
Engine Shutdown Procedure before Welding or Performing Maintenance 20-15

WARNINGS AND CAUTIONS 22-1

TABLE OF CONTENTS (cont.)

TRUCK OPERATION 30-1
PREPARING FOR OPERATION 30-1
Safety Is Thinking Ahead 30-1
WALK AROUND INSPECTION 30-1
ENGINE START-UP SAFETY PRACTICES 30-5
AFTER STARTING THE ENGINE 30-6
Additional Guidelines 30-6
MACHINE OPERATION SAFETY PRECAUTIONS 30-6
MACHINE OPERATION ON THE HAUL ROAD 30-7
STARTING ON A GRADE WITH A LOADED TRUCK 30-8
PASSING 30-8
LOADING 30-8
DUMPING 30-8
Raising The Dump Body 30-8
Lowering The Dump Body 30-9
TOWING 30-10
SAFE PARKING PROCEDURES 30-11
NORMAL ENGINE SHUTDOWN PROCEDURE 30-11
DELAYED ENGINE SHUTDOWN PROCEDURE 30-11
SUDDEN LOSS OF ENGINE POWER 30-12
DISABLED TRUCK DUMPING PROCEDURE 30-13
Hookup 30-13
Raising the Body 30-13
Lowering the Body 30-13
RESERVE ENGINE OIL SYSTEM (Optional) 30-14

OPERATOR CAB AND CONTROLS 32-1
STEERING WHEEL AND CONTROLS 32-2
Horn Button 32-2
Tilt / Telescope Lever 32-2
Multi-Function Turn Signal Switch 32-2
DYNAMIC RETARDING 32-3
Retarder Control Lever 32-3
Dynamic Retarder/Service Brake Pedal 32-3
Throttle/Accelerator Pedal 32-4
Starting on a Grade With a Loaded Truck 32-4
GRADE/SPEED RETARD CHART 32-4
OVERHEAD PANEL AND DISPLAYS 32-6

TABLE OF CONTENTS (cont.)

CENTER CONSOLE 32-7
F-N-R Selector Switch 32-7
Hoist Control Lever 32-8
Raising The Dump Body 32-8
Lowering The Dump Body 32-8
Ash Tray 32-8
Lighter 32-8
L.H. Window Control Switch 32-8
R.H. Window Control Switch 32-8
Engine Shutdown Switch 32-8
Override/Fault Reset Switch 32-9
Retard Speed Control (RSC) Switch 32-9
Retard Speed Control (RSC) Adjust Dial 32-9
Data Store Button 32-10
Engine Control System 32-10
Service Engine Light 32-10
Engine Diagnostic Download Port 32-10
Payload Meter Port 32-10
TCI Download Port 32-10
Modular Mining System (Optional) 32-10
PSC Download Port 32-10
Payload Meter And Download Connector 32-10
OPERATOR'S SEAT 32-11
Adjustment 32-11
Seat Removal 32-11
Seat Installation 32-11
HEATER / AIR CONDITIONER COMPARTMENT AND CONTROLS 32-12
Heater/Air Conditioner Vents 32-12
Defroster Control Switch 32-12
Heat Control Switch 32-12
Temperature Control Knob 32-12
Fan Control Knob 32-12
Heater/Air Conditioner Selector Switch 32-12
INSTRUMENT PANEL 32-13
Control Symbols 32-13
Key Switch 32-15
Starting 32-15
Engine Shutdown Switch with 5 Minute Idle Timer Delay 32-15
Fog Lights (Optional) 32-16
Ladder Light Switch 32-16
Manual Backup Switch 32-16

TABLE OF CONTENTS (cont.)

Panel Illumination Lights 32-16
Cab/Air Conditioner Vents 32-16
Rotating Beacon Light Switch (Optional) 32-16
Heated Mirror Switch (Optional) 32-16
Wheel Brake Lock Control 32-17
Parking Brake Control 32-17
Tachometer 32-17
Right Turn Signal Indicator 32-18
High Beam Indicator 32-18
Left Turn Signal Indicator 32-18
Speedometer/Payload Meter Display 32-18
Voltmeter 32-18
Engine Oil Pressure Gauge 32-18
Water Temperature Gauge 32-18
Fuel Gauge 32-18
AC Drive System Temperature Gauge 32-19
Hourmeter 32-19
Hydraulic Oil Temperature Gauge 32-19
Rest Switch 32-20
Light Switch 32-20
Panel Light Dimmer 32-20
Payload Meter Switch 32-20
OVERHEAD STATUS / WARNING INDICATORS 32-21
Status / Warning Indicator Light Symbols 32-22
Hazard Warning Lights 32-28
Lamp Test Switch 32-28
Link-On Warning Light 32-28
VEHICLE HEALTH MONITORING SYSTEM (VHMS) 32-29
Operation 32-29
Interface Module 32-30
Basic Precautions 32-30
FUSE BLOCKS 32-31
CIRCUIT BREAKERS 32-31

LUBRICATION AND SERVICE 40-1
930E SERVICE CAPACITIES 40-1
HYDRAULIC TANK SERVICE 40-1
Adding Oil 40-1
WHEEL MOTOR SERVICE 40-1
COOLANT LEVEL CHECK 40-2
RADIATOR FILLING PROCEDURE 40-2
RESERVE ENGINE OIL SYSTEM (Optional) 40-2
Reserve Oil Tank Filling Procedure (Remote fill) 40-2

TABLE OF CONTENTS (cont.)

LUBRICATION CHART 40-3
10 HOUR (DAILY) INSPECTION 40-4
50 HOUR LUBRICATION AND MAINTENANCE CHECKS 40-7
100 HOUR LUBRICATION AND MAINTENANCE CHECKS 40-8
250 HOUR LUBRICATION AND MAINTENANCE CHECKS 40-9
500 HOUR LUBRICATION AND MAINTENANCE CHECKS 40-12
1000 HOURS LUBRICATION AND MAINTENANCE CHECKS 40-13
5000 HOUR MAINTENANCE CHECKS 40-14

AUTOMATIC LUBRICATION SYSTEM 42-1
GENERAL DESCRIPTION 42-1
SYSTEM COMPONENTS 42-3
SYSTEM OPERATION 42-4
Normal Operation 42-4
Pressure Failure Detection Circuits 42-5
GENERAL INSTRUCTIONS 42-6
Required Lubricant For System 42-6
System Priming 42-6
Filter Assembly 42-6
LUBRICANT PUMP 42-7
Pump Housing Oil Level 42-7
Pump Pressure Control 42-7
Pressure Control Valve Adjustment 42-7
INJECTORS (SL-1 Series “H”) 42-8
Injector Specifications 42-8
Injector Adjustment 42-8
INJECTOR OPERATION 42-9
SYSTEM CHECKOUT 42-10
Lubrication Cycle Timer Check 42-10
Lubrication Cycle Timer Adjustment 42-10
PREVENTIVE MAINTENANCE PROCEDURES 42-11
Daily Lubrication System Inspection 42-11
250 Hour Inspection 42-11
1000 Hour Inspection 42-11
SYSTEM TROUBLESHOOTING CHART 42-12

TABLE OF CONTENTS (cont.)

COMPONENTS & SPECIFICATIONS 50-1
MAJOR COMPONENTS DESCRIPTIONS 50-1
SPECIFICATIONS 50-3

PAYLOAD METER III 60-1

RADIO / CASSETTE PLAYER 70-1
GENERAL RECEIVER FUNCTIONS 70-1
Turning The Power On And Off 70-1
Display 70-1
Setting The Default Display 70-1
Adjusting Display Brightness 70-1
SETTING THE TIME 70-2
OPERATING THE RADIO 70-2
BAND 70-2
TUNE/SEEK 70-2
Manual Tuning 70-2
SEEK Mode 70-2
SCAN 70-2
AUTO 70-2
ADJUSTING THE RECEIVER SETTINGS 70-3
PROGRAMMING PRESET STATIONS 70-3
OPERATION OF THE WEATHERBAND (U.S.) 70-3
SATELLITE RADIO 70-4
Operating Satellite Radio 70-4
Program Type Search (PTY) 70-4
CASSETTE PLAYER 70-5
Playing A Cassette 70-5
Cassette Functions 70-5
Progrommable Eject Default 70-5
Bad Tape Detect 70-6
Cleaning The Cassette Player 70-6

NOTES

STANDARD CHARTS AND TABLES

This manual provides dual dimensioning for most specifications. U.S. standard units are specified first, with metric (SI) units in parentheses.

References throughout the manual to standard torques or other standard values will be to one of the following charts or tables. For values not shown in these charts or tables, standard conversion factors for most commonly used measurements are provided in TABLE XIII, page 12-6.

Standard torque values are not to be used when “turn-of-the-nut” tightening procedures are recommended.

INDEX OF TABLES

TABLE I . . . . . Standard Torque Chart (SAE) . . 12-1
TABLE II . Standard Torque, 12-Point, Grade 9 . . 12-2
TABLE III . . Standard Metric Assembly Torque . . 12-2
TABLE IV . . . . . JIC Swivel Nuts Torque Chart . . 12-3
TABLE V . . . . . .Pipe Thread Torque Chart . . 12-3
TABLE VI . . . . . O-Ring Boss Torque Chart . . 12-3
TABLEVII . . . . O-Ring Face Seal Torque Chart . . 12-3
TABLE VIII Torque Conversions (ft.lbs. to N•m) . . 12-4
TABLE IX . Torque Conversions (ft.lbs. to kg•m) . . 12-4
TABLE X . . Pressure Conversions (psi to kPa) . . 12-4
TABLE XI . Pressure Conversions (psi to MPa) . . 12-5
TABLE XII . . . . . .Temperature Conversions . . 12-5
TABLE XIII . . . Common Conversion Multipliers . . 12-6

EFFECT OF SPECIAL LUBRICANTS On Fasteners and Standard Torque Values

The Komatsu engineering department does not recommend the use of special friction-reducing lubricants, such as Copper Coat, Never-Seez®, and other similar products, on the threads of standard fasteners where standard torque values are applied. The use of special friction-reducing lubricants will significantly alter the clamping force being applied to fasteners during the tightening process.

If special friction-reducing lubricants are used with the standard torque values listed below in Table I (and in Komatsu shop manuals), excessive stress and possible breakage of the fasteners may result.

Where the torque tables specify “Lubricated Threads” for the standard torque values listed, these standard torque values are to be used with simple lithium base chassis grease (multi-purpose EP NLGI) or a rust-preventive grease (see list, page 12-2) on the threads and seats unless specified otherwise.

NOTE: Always be sure the threads of fasteners and tapped holes are free of burrs and other imperfections before assembling.

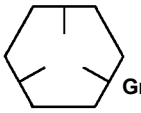
Grade 5

TABLE I. STANDARD TORQUE CHART
SAE HEX HEAD CAPSCREW AND NUT ASSEMBLY
(LUBRICATED THREADS)
TOLERANCES ±10%

Grade 8
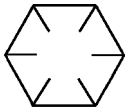

Capscrew Thread Size	TORQUE - GRADE 5			TORQUE - GRADE 8			Capscrew Thread Size	TORQUE - GRADE 5			TORQUE - GRADE 8		
	ft. lbs.	kg•m	N•m	ft. lbs.	kg•m	N•m		ft. lbs.	kg•m	N•m	ft. lbs.	kg•m	N•m
1/4-20	7	0.97	9.5	10	1.38	13.6	3/4-16	235	32.5	319	335	46.3	454
1/4-28	8	1.11	10.8	11	1.52	14.9	7/8-9	350	48.4	475	500	69.2	678
5/16-18	15	2.07	20.3	21	2.90	28	7/8-14	375	51.9	508	530	73.3	719
5/16-24	16	2.21	22	22	3.04	30	1.0-8	525	72.6	712	750	103.7	1017
3/8-16	25	3.46	34	35	4.84	47	1.0-12	560	77.4	759	790	109.3	1071
3/8-24	30	4.15	41	40	5.5	54	1.0-14	570	78.8	773	800	110.6	1085
7/16-14	40	5.5	54	58	8.0	79	1 1/8-7	650	89.9	881	1050	145	1424
7/16-20	45	6.2	61	62	8.57	84	1 1/8-12	700	96.8	949	1140	158	1546
1/2-13	65	9	88	90	12.4	122	1 1/4-7	910	125.9	1234	1480	205	2007
1/2-20	70	9.7	95	95	13.1	129	1 1/4-12	975	134.8	1322	1580	219	2142
9/16-12	90	12.4	122	125	17.3	169	1 3/8-6	1200	166	1627	1940	268	2630
9/16-18	95	13.1	129	135	18.7	183	1 3/8-12	1310	181	1776	2120	293	2874
5/8-11	125	17.3	169	175	24.2	237	1 1/2-6	1580	219	2142	2560	354	3471
5/8-18	135	18.7	183	190	26.2	258	1 1/2-12	1700	235	2305	2770	383	3756
3/4-10	220	30.4	298	310	42.8	420							
1 ft. lbs. = 0.138 kg•m = 1.356 N•m													

STANDARD ASSEMBLY TORQUES For 12-Point, Grade 9 Capscrews (SAE)

The following specifications apply to required assembly torques for all 12-point, Grade 9 (170,000 psi minimum tensile) capscrews.

- Capscrew threads and seats shall be lubricated when assembled.

NOTE: Unless the instructions specifically recommend otherwise, these standard torque values are to be used with simple lithium base chassis grease (multi-purpose EP NLGI) or a rust preventive grease (see list, this page) on the threads.

- Torques are calculated to give a clamping force of approximately 75% of proof load.
- The maximum torque tolerance shall be ±10% of the torque value shown.

TABLE II. STANDARD ASSEMBLY TORQUE for 12-Point, Grade 9 Capscrews

CAPSCREW SIZE*	TORQUE ft. lbs.	TORQUE N•m	TORQUE kg•m
0.250 - 20	12	16	1.7
0.312 - 18	24	33	3.3
0.375 - 16	42	57	5.8
0.438 -14	70	95	9.7
0.500 -13	105	142	14.5
0.562 - 12	150	203	20.7
0.625 - 11	205	278	28.3
0.750 - 10	360	488	49.7
0.875 - 9	575	780	79.4
1.000 - 8	860	1166	119
1.000 - 12	915	1240	126
1.125 - 7	1230	1670	170
1.125 - 12	1330	1800	184
1.250 - 7	1715	2325	237
1.250 - 12	1840	2495	254
1.375 - 6	2270	3080	313
1.375 - 12	2475	3355	342
1.500 - 6	2980	4040	411
1.500 - 12	3225	4375	445
* Shank Diameter (in.) - Threads per inch			
This table represents standard values only. Do not use these values to replace torque values which are specified in assembly instructions.			

STANDARD ASSEMBLY TORQUES For Class 10.9 Capscrews & Class 10 Nuts

The following specifications apply to required assembly torques for all metric Class 10.9 finished hexagon head capscrews and Class 10 nuts.

- Capscrew threads and seats shall not be lubricated when assembled. These specifications are based on all capscrews, nuts, and hardened washers being phosphate and oil coated.

NOTE: If zinc-plated hardware is used, each piece must be lubricated with simple lithium base chassis grease (multi-purpose EP NLGI) or a rust preventive grease (see list, this page) to achieve the same clamping forces provided below.

- Torques are calculated to give a clamping force of approximately 75% of proof load.
- The maximum torque tolerance shall be within ±10% of the torque value shown.

TABLE III. STANDARD ASSEMBLY TORQUE for Metric Class 10.9 Capscrews & Class 10 Nuts

CAPSCREW SIZE*	TORQUE N•m	TORQUE ft.lbs.	TORQUE kg•m
M6 x1	12	9	1.22
M8 x 1.25	30	22	3.06
M10 x 1.5	55	40	5.61
M12 x 1.75	95	70	9.69
M14 x 2	155	114	15.81
M16 x 2	240	177	24.48
M20 x 2.25	465	343	47.43
M24 x 3	800	590	81.6
M30 x 3.5	1600	1180	163.2
M36 x 4	2750	2028	280.5
* Shank Diameter (mm) - Threads per millimeter			
This table represents standard values only. Do not use these values to replace torque values which are specified in assembly instructions.			

Suggested* Sources for Rust Preventive Grease:

- AMERICAN ANTI-RUST GREASE #3-X from Standard Oil Company (also American Oil Co.)
- GULF NORUST #3 from Gulf Oil Company.
- MOBILARMA 355, Product No. 66705 from Mobil Oil Corporation.
- RUST BAN 326 from Humble Oil Company.
- RUSTOLENE B GREASE from Sinclair Oil Co.
- RUST PREVENTIVE GREASE - CODE 312 from the Southwest Grease and Oil Company.

NOTE: This list represents the current engineering approved sources for use in Komatsu manufacture. It is not exclusive. Other products may meet the same specifications of this list.

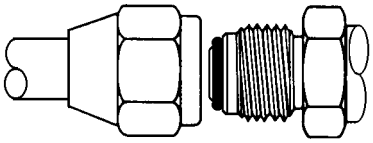

TABLE IV.
TORQUE CHART FOR JIC 37° SWIVEL NUTS WITH OR WITHOUT O-RING SEALS

SIZE CODE	TUBE SIZE (O.D.)	THREADS UNF-2B	TORQUE FT. LBS.
– 2	0.125	0.312 – 24	4 ±1
– 3	0.188	0.375 – 24	8 ±3
– 4	0.250	0.438 – 20	12 ±3
– 5	0.312	0.500 – 20	15 ±3
– 6	0.375	0.562 – 18	18 ±5
– 8	0.500	0.750 – 16	30 ±5
– 10	0.625	0.875 – 14	40 ±5
– 12	0.750	1.062 – 12	55 ±5
– 14	0.875	1.188 – 12	65 ±5
– 16	1.000	1.312 – 12	80 ±5
– 20	1.250	1.625 – 12	100 ±10
– 24	1.500	1.875 – 12	120 ±10
– 32	2.000	2.500 – 12	230 ±20

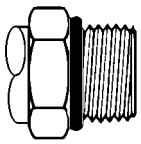

TABLE VI.
TORQUE CHART FOR O-RING BOSS FITTINGS

SIZE CODE	TUBE SIZE (O.D.)	THREADS UNF-2B	TORQUE FT. LBS.
– 2	0.125	0.312 – 24	4 ±2
– 3	0.188	0.375 – 24	5 ±2
– 4	0.250	0.438 – 20	8 ±3
– 5	0.312	0.500 – 20	10 ±3
– 6	0.375	0.562 – 18	13 ±3
– 8	0.500	0.750 – 16	24 ±5
– 10	0.625	0.875 – 14	32 ±5
– 12	0.750	1.062 – 12	48 ±5
– 14	0.875	1.188 – 12	54 ±5
– 16	1.000	1.312 – 12	72 ±5
– 20	1.250	1.625 – 12	80 ±5
– 24	1.500	1.875 – 12	80 ±5
– 32	2.000	2.500 – 12	96 ±10

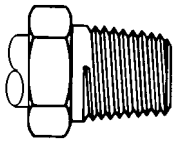

TABLE V.
TORQUE CHART FOR PIPE THREAD FITTINGS

SIZE CODE	PIPE THREAD SIZE	WITH SEALANT FT. LBS.	WITHOUT SEALANT FT. LBS.
– 2	0.125 – 27	15 ±3	20 ±5
– 4	0.250 – 18	20 ±5	25 ±5
– 6	0.375 – 18	25 ±5	35 ±5
– 8	0.500 – 14	35 ±5	45 ±5
– 12	0.750 – 14	45 ±5	55 ±5
– 16	1.000 – 11.50	55 ±5	65 ±5
– 20	1.250 – 11.50	70 ±5	80 ±5
– 24	1.500 – 11.50	80 ±5	95 ±10
– 32	2.000 – 11.50	95 ±10	120 ±10

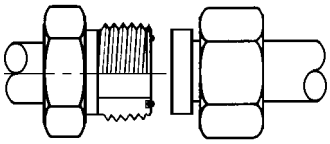

TABLE VII.
TORQUE CHART FOR O-RING FACE SEAL FITTINGS

SIZE CODE	TUBE SIZE (O.D.)	THREADS UNF-2B	TORQUE FT. LBS.
– 4	0.250	0.438 – 20	11 ±1
– 6	0.375	0.562 – 18	18 ±2
– 8	0.500	0.750 – 16	35 ±4
– 10	0.625	0.875 – 14	51 ±5
– 12	0.750	1.062 – 12	71 ±7
– 16	1.000	1.312 – 12	98 ±6
– 20	1.250	1.625 – 12	132 ±7
– 24	1.500	1.875 – 12	165 ±15

TABLE VIII. TORQUE CONVERSIONS
Foot Pounds (ft. lbs.) to Newton-meters (N•m)

FT. LBS.	0	1	2	3	4	5	6	7	8	9
0	**(N.m)**	1.36	2.71	4.07	5.42	6.78	8.14	9.49	10.85	12.20
10	13.56	14.91	16.27	17.63	18.98	20.34	21.69	23.05	24.40	25.76
20	27.12	28.47	29.83	31.18	32.54	33.90	35.25	36.61	37.96	39.32
30	40.67	42.03	43.39	44.74	46.10	47.45	48.81	50.17	51.52	52.87
40	54.23	55.59	56.94	58.30	59.66	60.01	62.37	63.72	65.08	66.44
50	67.79	69.15	70.50	71.86	73.21	74.57	75.93	77.28	78.64	80.00
60	81.35	82.70	84.06	85.42	86.77	88.13	89.48	90.84	92.20	93.55
70	94.91	96.26	97.62	98.97	100.33	101.69	103.04	104.40	105.75	107.11
80	108.47	109.82	111.18	112.53	113.89	115.24	116.60	117.96	119.31	120.67
90	122.03	123.38	124.74	126.09	127.45	128.80	130.16	131.51	132.87	134.23
See NOTE on page 12-5 regarding table usage.										

TABLE IX. TORQUE CONVERSIONS
Foot Pounds (ft. lbs.) to kilogram-meters (kg•m)

FT. LBS.	0	1	2	3	4	5	6	7	8	9
0	**(kg.m)**	0.138	0.277	0.415	0.553	0.692	0.830	0.968	1.106	1.245
10	1.38	1.52	1.66	1.80	1.94	2.07	2.21	2.35	2.49	2.63
20	2.77	2.90	3.04	3.18	3.32	3.46	3.60	3.73	3.87	4.01
30	4.15	4.29	4.43	4.56	4.70	4.84	4.98	5.12	5.26	5.39
40	5.53	5.67	5.81	5.95	6.09	6.22	6.36	6.50	6.64	6.78
50	6.92	7.05	7.19	7.33	7.47	7.61	7.74	7.88	8.02	8.16
60	8.30	8.44	8.57	8.71	8.85	8.99	9.13	9.27	9.40	9.54
70	9.68	9.82	9.96	10.10	10.23	10.37	10.51	10.65	10.79	10.93
80	11.06	11.20	11.34	11.48	11.62	11.76	11.89	12.03	12.17	12.30
90	12.45	12.59	12.72	12.86	13.00	13.14	13.28	13.42	13.55	13.69
See NOTE on page 12-5 regarding table usage.										

TABLE X. PRESSURE CONVERSIONS
Pounds per square inch (psi) to Kilopascals (kPa)
Formula: psi x 6.895 = kPa

PSI	0	1	2	3	4	5	6	7	8	9
0	**(kPa)**	6.895	13.79	20.68	27.58	34.47	41.37	48.26	55.16	62.05
10	68.95	75.84	82.74	89.63	96.53	103.42	110.32	117.21	124.1	131.0
20	137.9	144.8	151.7	158.6	165.5	172.4	179.3	186.2	193.1	200.0
30	206.8	213.7	220.6	227.5	234.4	241.3	248.2	255.1	262.0	268.9
40	275.8	282.7	289.6	296.5	303.4	310.3	317.2	324.1	331.0	337.9
50	344.7	351.6	358.5	365.4	372.3	379.2	386.1	393.0	399.9	406.8
60	413.7	420.6	427.5	434.4	441.3	448.2	455.1	462.0	468.9	475.8
70	482.6	489.5	496.4	503.3	510.2	517.1	524.0	530.9	537.8	544.7
80	551.6	558.5	565.4	572.3	579.2	586.1	593.0	599.9	606.8	613.7
90	620.5	627.4	634.3	641.2	648.1	655.0	661.9	668.8	675.7	682.6
See NOTE on page 12-5 regarding table usage.										

TABLE XI. PRESSURE CONVERSIONS
Pounds per square inch (psi) to Megapascals (MPa)
Formula: psi x 0.0069 = MPa

PSI	0	10	20	30	40	50	60	70	80	90
0	**(MPa)**	0.069	0.14	0.21	0.28	0.34	0.41	0.48	0.55	0.62
100	0.69	0.76	0.83	0.90	0.97	1.03	1.10	1.17	1.24	1.31
200	1.38	1.45	1.52	1.59	1.65	1.72	1.79	1.86	1.93	2.00
300	2.07	2.14	2.21	2.28	2.34	2.41	2.48	2.55	2.62	2.69
400	2.76	2.83	2.90	2.96	3.03	3.10	3.17	3.24	3.31	3.38
500	3.45	3.52	3.59	3.65	3.72	3.79	3.86	3.93	4.00	4.07
600	4.14	4.21	4.27	4.34	4.41	4.48	4.55	4.62	4.69	4.76
700	4.83	4.90	4.96	5.03	5.10	5.17	5.24	5.31	5.38	5.45
800	5.52	5.58	5.65	5.72	5.79	5.86	5.93	6.00	6.07	6.14
900	6.21	6.27	6.34	6.41	6.48	6.55	6.62	6.69	6.76	6.83
See NOTE below regarding Table usage.										

NOTE: Tables such as Table VIII, IX, X, and XI may be used as in the following example:

Example: Convert 975 psi to kilopascals (kPa).

1. Select Table X.
2. Go to PSI row 90, column 7; read 668.8
   97 psi = 668.8 kPa.
3. Multiply by 10:
   970 psi = 6688 kPa.
4. Go to PSI row 0, column 5; read 34.475
   psi = 34.47 kPa. Add to step 3.
5. 970 + 5 psi = 6688 + 34 = 6722 kPa.

TABLE XII. TEMPERATURE CONVERSIONS
Formula: F° - 32 ³ 1.8 = C° or C° x 1.8 + 32 = F°

CELSIUS C°		FAHRENHEIT F°	CELSIUS C°		FAHRENHEIT F°	CELSIUS C°		FAHRENHEIT F°
121	250	482	63	145	293	4	40	104
118	245	473	60	140	284	2	35	95
116	240	464	57	135	275	– 1	30	86
113	235	455	54	130	266	– 4	25	77
110	230	446	52	125	257	– 7	20	68
107	225	437	49	120	248	– 9	15	59
104	220	428	46	115	239	– 12	10	50
102	215	419	43	110	230	– 15	5	41
99	210	410	41	105	221	– 18	0	32
96	205	401	38	100	212	– 21	– 5	23
93	200	392	35	95	293	– 23	– 10	14
91	195	383	32	90	194	– 26	– 15	5
88	190	374	29	85	185	– 29	– 20	– 4
85	185	365	27	80	176	– 32	– 25	– 13
82	180	356	24	75	167	– 34	– 30	– 22
79	175	347	21	70	158	– 37	– 35	– 31
77	170	338	18	65	149	– 40	– 40	– 40
74	165	329	15	60	140	– 43	– 45	– 49
71	160	320	13	55	131	– 46	– 50	– 58
68	155	311	10	50	122	– 48	– 55	– 67
66	150	302	7	45	113	– 51	– 60	– 76

NOTE: The numbers in the unmarked columns refer to temperature in either degrees Celsius (C°) or Fahrenheit (F°). Select a number in this unmarked column and read to the left to convert to degrees Celsius (C°) or read to the right to convert to degrees Fahrenheit (F°). If starting with a known temperature (either C° or F°), find that temperature in the **marked** column and read the converted temperature in the center, **unmarked** column.

Table XIII. TABLE XIII
COMMON CONVERSION MULTIPLIERS

COMMON CONVERSION MULTIPLIERS ENGLISH TO METRIC		
To Convert From	**TO**	**Multiply By**
inch – in.	millimeter (mm)	25.40
inch – in.	centimeter (cm)	2.54
foot – ft.	meter (m)	0.3048
yard – yd.	meter (m)	0.914
mile – mi.	kilometer (km)	1.61
sq. in. – in.^{2}	sq. centimeters (cm^2)	6.45
sq. ft. – ft.^{2}	sq. centimeters (cm^2)	929
cu. in. – in.^{3}	cu. centimeters (cm^3)	16.39
cu. in. – in.^{3}	liters (l)	0.016
cu. ft. – ft.^{3}	cu. meters (m^3)	0.028
cu. ft. – ft.^{3}	liters (l)	28.3
ounce – oz.	kilogram (kg)	0.028
fluid ounce – fl. oz.	milliliter (ml)	29.573
pound (mass)	kilogram (kg)	0.454
pound (force) – lbs.	Newton (N)	4.448
in. lbs. (force)	Newton-meters (N•m)	0.113
ft. lbs. (force)	Newton-meters (N•m)	1.356
ft. lbs. (force)	kilogram-meters (kg•m)	0.138
psi (pressure)	kilopascals (kPa)	6.895
psi (pressure)	megapascals (MPa)	0.007
psi (pressure)	kilograms/cm^2 (kg/cm^2)	0.0704
ton (short)	kilogram (kg)	907.2
ton (short)	metric ton	0.0907
quart – qt.	liters (l)	0.946
gallon – gal.	liters (l)	3.785
HP (horsepower)	Watts	745.7
HP (horsepower)	kilowatts (kw)	0.745

COMMON CONVERSION MULTIPLIERS METRIC TO ENGLISH		
To Convert From	**TO**	**Multiply By**
millimeter (mm)	inch – in.	0.0394
centimeter (cm)	inch – in.	0.3937
meter (m)	foot – ft.	3.2808
meter (m)	yard – yd.	1.0936
kilometer (km)	mile – mi.	0.6210
sq. centimeters (cm^2)	sq. in. – in.^{2}	0.1550
sq. centimeters (cm^2)	sq. ft. – ft.^{2}	0.001
cu. centimeters (cm^3)	cu. in. – in.^{3}	0.061
liters (l)	cu. in. – in.^{3}	61.02
cu. meters (m^3)	cu. ft. – ft.^{3}	35.314
liters (l)	cu. ft. – ft.^{3}	0.0353
grams (g)	ounce – oz.	0.0353
milliliter (ml)	fluid ounce – fl. oz.	0.0338
kilogram (kg)	pound (mass)	2.2046
Newton (N)	pound (force) – lbs.	0.2248
Newton-meters (N•m)	kilogram-meters (kg•m)	0.102
Newton-meters (N.m)	ft. lbs. (force)	0.7376
kilogram-meters (kg•m)	ft. lbs. (force)	7.2329
kilogram-meters (kg•m)	Newton-meters (N•m)	9.807
kilopascals (kPa)	psi (pressure)	0.1450
megapascals (MPa)	psi (pressure)	145.038
kilograms/cm^2 (kg/cm^2)	psi (pressure)	14.2231
kilograms/cm^2 (kg/cm^2)	kilopascals (kPa)	98.068
kilogram (kg)	ton (short)	0.0011
metric ton	ton (short)	1.1023
liters (l)	quart – qt.	1.0567
liters (l)	gallon – gal.	0.2642
Watts	HP (horsepower)	0.00134
kilowatts (kw)	HP (horsepower)	1.3410

GENERAL SAFETY

Safety records of most organizations will show that the greatest percentage of accidents are caused by unsafe acts of persons. The remainder are caused by unsafe mechanical or physical conditions. Report all unsafe conditions to the proper authority.

The following safety rules are provided as a guide for the operator. However, local conditions and regulations may add many more to this list.

⚠WARNING

Read and follow all safety precautions. Failure to do so may result in serious injury or death.

Safety Rules

- Only trained and authorized personnel can operate and maintain the machine.
- Follow all safety rules, precautions and instructions when operating or performing maintenance on the machine.
- When working with another operator or a person on work site traffic duty, ensure all personnel understand all hand signals that are to be used.

Truck Safety Features

- Ensure all guards and covers are in their proper position. Repair any damaged guards and covers. (See Walk-Around Inspection, later in this section.)
- Learn the proper use of safety features such as safety locks, safety pins, and seat belts. Always use these safety features, properly.
- Never remove any safety features. Always keep safety features in good operating condition.
- Improper use of safety features may result in serious bodily injury or death.

Clothing And Personal Items

- Avoid wearing loose clothing, jewelry, and loose long hair. They can catch on controls or in moving parts and cause serious injury or death. Additionally, never wear oily clothes as they are flammable.

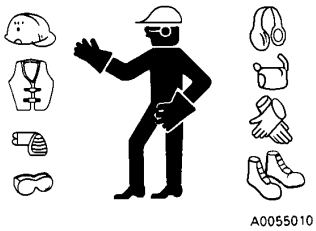

- Wear a hard hat, safety glasses, safety shoes, a mask and gloves when operating or maintaining a machine. Always wear safety goggles, a hard hat and heavy gloves if your job involves scattering metal chips or minute materials--particularly when driving pins with a hammer or when cleaning air cleaner elements with compressed air. Also, ensure that the work area is free of other personnel during such tasks.

Unauthorized Modification

- Any modification made to this vehicle without authorization from Komatsu America Corp. can possibly create hazards.
- Before making any modification, consult your authorized regional Komatsu America Corp. distributor. Komatsu will not be responsible for any injury or damage caused by any unauthorized modification.

Leaving The Operator’s Seat

- While leaving the operator's seat, DO NOT touch any controls. To prevent accidental operations from occurring, always perform the following:
- Move the shift control lever/switch to NEUTRAL and apply the parking brake.
- Lower the dump body, and move the hoist control lever to the FLOAT position.
- Stop the engine. When exiting the machine, always lock compartments, and take the keys with you to prevent entry from unauthorized persons.

Mounting And Dismounting

- Never jump on or off the machine. Never climb on or off a machine while it is moving.
- When climbing on or off a machine, face the machine and use the hand-hold and steps.
- Never hold any control levers when getting on or off a machine.
- Always maintain three-point contact with the hand-holds and steps to ensure that you support yourself.
- When bringing tools up to the operating deck, always pass them by hand or pull them up by rope.
- If there is any oil, grease, or mud on the hand-holds or steps, wipe them clean immediately. Always keep these components clean. Repair any damage and tighten any loose bolts.

- Use the handrails and steps marked by arrows in the diagram below when getting on or off the machine.

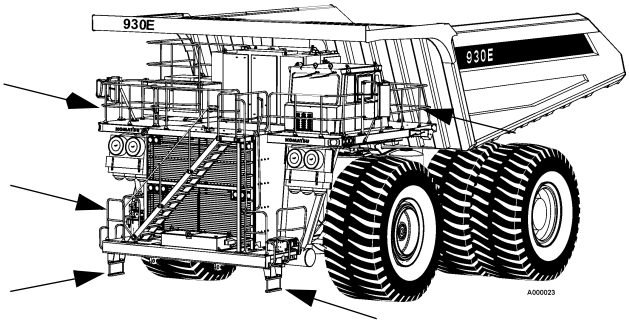

Fire Extinguishers And First Aid Kits

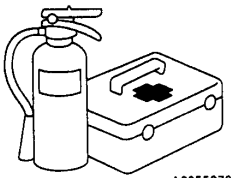

- Ensure fire extinguishers are accessible and proper usage techniques are known.
- Provide a first aid kit at the storage point.
- Know what to do in the event of a fire.
- Keep the phone numbers of persons you should contact in case of an emergency on hand.

Precautions For High Temperature Fluids

- Immediately after machine operation, engine coolant, engine oil, and hydraulic oil are at high temperatures and are pressurized. If the cap is removed, the fluids drained, the filters are replaced, etc., there is danger of serious burns. Allow heat and pressure to dissipate before performing such tasks and follow proper procedures as outlined in the service manual.
- To prevent hot coolant from spraying:
  1. Stop the engine, and wait for the coolant temperature to decrease.
  2. Depress the pressure relief button on the radiator cap.
  3. Turn the radiator cap slowly to allow pressure to dissipate.
- To prevent hot engine oil spray:
  1. Stop the engine.
  2. Wait for the oil temperature to cool down.
  3. Turn the cap slowly to allow pressure to dissipate.

Asbestos Dust Hazard Prevention

Asbestos dust is hazardous to your health when inhaled. If you handle materials containing asbestos fibers, follow the guidelines below:

- Never use compressed air for cleaning.
- Use water for cleaning and to control dust.
- Operate the machine or perform tasks with the wind to your back, whenever possible.
- Use an approved respirator, when necessary.

Fire Prevention For Fuel And Oil

- Fuel, oil, and antifreeze can be ignited by a flame. These fluids are extremely flammable and hazardous.
- Keep flames away from flammable fluids.
- Stop the engine while refueling.
- Never smoke while refueling
- Tighten all fuel and oil tank caps securely.
- Refuel and maintain oil in well ventilated areas.
- Keep oil and fuel in a designated location. DO NOT allow unauthorized persons to enter.

ROPS Precautions

- The Rollover Protection Structure (ROPS) must be properly installed for machine operation.
- The ROPS is intended to protect the operator if the machine should roll over. It is designed not only to support the load of the machine, but also to absorb the energy of the impact.
- ROPS structures installed on equipment manufactured and designed by Komatsu America Corp. fulfills all of the regulations and standards for all countries. If it is modified or repaired without authorization from Komatsu, or is damaged when the machine rolls over, the strength of the structure will be compromised and will not be able to fulfill its intended purpose. Optimum strength of the structure can only be achieved if it is repaired or modified as specified by Komatsu.
- When modifying or repairing the ROPS, always consult your nearest Komatsu distributor.
- Even with the ROPS installed, the operator must always use the seat belt when operating the machine.

Preventing Injury From Work Equipment

- Never position any part of your body between movable parts such as the dump body, chassis or cylinders. If the work equipment is operated, clearances will change and may cause serious bodily injury or death.

Precautions For Optional Attachments

- When installing and using optional equipment, read the instruction manual for the attachment and the information related to attachments in this manual.
- DO NOT use attachments that are not authorized by Komatsu America Corp., or the authorized regional Komatsu distributor. Use of unauthorized attachments could create a safety problem and adversely affect the proper operation and useful life of the machine.
- Any injuries, accidents, and product failures resulting from the use of unauthorized attachments will not be the responsibility of Komatsu America Corp., or the authorized regional Komatsu distributor.

Precautions When Starting The Machine

- Start the engine from the operator’s seat, only.
- Never attempt to start the engine by shorting across the starter terminals. This may cause fire, or serious injury or death to anyone in the machine’s path.

PRECAUTIONS FOR TRUCK OPERATION

Safety Is Thinking Ahead

Prevention is the best safety program. Prevent a potential accident by knowing the employer's safety requirements and all necessary job site regulations. In addition, know the proper use and care of all the safety equipment on the truck. Only qualified operators or technicians should attempt to operate or maintain a Komatsu machine.

Safe practices start before the operator gets to the equipment!

Safety At The Worksite

- When walking to and from a truck, maintain a safe distance from all machines even when the operator is visible.
- Before starting the engine, thoroughly check the area for any unusual conditions that could be dangerous.
- Examine the road surface at the job site and determine the best and safest method of operation.
- Choose an area where the ground is as horizontal and firm as possible before performing the operation.
- If you need to operate on or near a public road, protect pedestrians and cars by designating a person for work site traffic duty or by installing fences around the work site.
- The operator must personally check the work position, the roads to be used, and existence of obstacles before starting operations.
- Always determine the travel roads to be used at the work site. Travel roads must be maintained in order to ensure safe machine travel.
- If travel through wet areas is necessary, check the depth and flow of water before crossing the shallow parts. Never drive through water which exceeds the permissible water depth.

Fire Prevention

- Thoroughly remove wood chips, leaves, paper and other flammable items accumulated in the engine compartment, as they could cause a fire.

- Check fuel, lubrication, and hydraulic systems for leaks. Repair any leaks. Clean any excess oil, fuel or other flammable fluids, and dispose of properly.
- Ensure a fire extinguisher is present and in proper working condition.
- DO NOT operate the machine near open flames.

Preparing For Operation

- Always mount and dismount while facing the truck. Never attempt to mount or dismount the truck while it is in motion. Always use handrails and ladders when mounting or dismounting the truck.
- Check the deck areas for debris, loose hardware, and tools. Check for people and objects that remain on or around the truck.
- Become familiar with and use all protective equipment devices on the truck and ensure that these items (anti-skid material, grab bars, seat belts, etc.) are securely in place.

Ventilation For Enclosed Areas

- If it is necessary to start the engine in an enclosed area, provide adequate ventilation. Exhaust fumes from the engine can kill.

Mirrors, Windows, And Lights

- Remove any dirt from the surface of the windshield, cab windows, mirrors and lights. Good visibility may prevent an accident.
- Adjust the mirrors to a position where the operator can see best from the operator's seat.
- Ensure headlights, work lights and taillights are in proper working order. Ensure that the machine is equipped with the proper work lamps needed for the operating conditions.
- Replace any broken mirrors, windows or lights.

In The Operator's Cab - Before Starting The Engine

- DO NOT leave tools or spare parts lying around or allow trash to accumulate in the cab of the truck. Keep all unauthorized reading material out of the truck cab.
- Keep the cab floor, controls, steps, and handrails free of oil, grease, snow, and excess dirt.
- Check the seat belt, buckle and hardware for damage or wear. Replace any worn or damaged parts. Always use the seat belts when operating a machine.
- Read and understand the contents of the Operation & Maintenance manual. Read safety and operating instructions with special attention. Become thoroughly acquainted with all gauges, instruments and controls before attempting operation of the truck.
- Read and understand the **WARNING** and **CAUTION** decals in the operator's cab.
- Ensure the steering wheel, horn, controls and pedals are free of any oil, grease or mud.
- Check operation of the windshield wiper, condition of wiper blades, and check the washer fluid reservoir level.
- Be familiar with all steering and brake system controls, warning devices, road speeds and loading capabilities, before operating the truck.

OPERATING THE MACHINE

Starting The Engine

- Never attempt to start the machine by shorting across the starter terminals. This may cause fire, or serious injury or death to anyone in machine's path.
- Never start the engine if a warning tag has been attached to the controls.
- When starting the engine, sound the horn as an alert.
- Start and operate the machine only while seated in the operator's seat.
- DO NOT allow any unauthorized persons in the operator's compartment or any other place on the machine.

Truck Operation - General

- Wear seat belts at all times.
- Only authorized persons are allowed to ride in the truck. Passengers must be in the cab and belted in the passenger seat.
- DO NOT allow anyone to ride on the decks or on the steps of the truck.
- DO NOT allow anyone to get on or off the truck while it is in motion.
- DO NOT move the truck in or out of a building without a signal person present.
- Know and obey hand signal communications between the operator and spotter. When other machines and personnel are present, the operator should move in and out of buildings, loading areas and through traffic, under the direction of a signal person. Courtesy at all times is a safety precaution!
- Immediately report any adverse conditions on haul road, pit or dump area that may cause an operating hazard.

- Check for flat tires periodically during a shift. If the truck has been operating on a “flat”, the truck must not be parked indoors until the tire cools. If the tire must be changed, DO NOT stand in front of the rim and locking ring when inflating a tire mounted on the machine. Observers should not be permitted in the area and should be kept away from the side of such tires.

⚠ DANGER

The tire and rim assembly may explode if subjected to excessive heat. Personnel should move to a remote or protected location if there is a fire near the tire and wheel area or if the smell of burning rubber or excessively hot brakes is evident.

If the truck must be approached, such as to fight a fire, those personnel should do so only while facing the tread area of the tire (front or back), unless protected by use of large heavy equipment as a shield. Stay at least 50 ft. (15 m) from the tread of the tire.

In the event of fire in the tire and wheel area (including brake fires), stay away from the truck for at least 8 hours or until the tire and wheel are cool.

- Keep serviceable fire fighting equipment on hand. Report used extinguishers for replacement or refilling.
- Always apply the parking brake when the truck is parked and unattended. DO NOT leave the truck unattended while the engine is running.
- Park the truck a safe distance away from other vehicles as determined by the supervisor.
- Stay alert at all times! In the event of an emergency, be prepared to react quickly and avoid accidents. If an emergency arises, know where to get prompt assistance.

Traveling In The Truck

- When traveling on rough ground, travel at low speeds. When changing direction, avoid turning suddenly.
- Lower the dump body and set the dump lever to the FLOAT position before traveling.
- If the engine should stop when the machine is in motion, the emergency steering system will be activated. Apply the brakes immediately and stop the machine as quickly and safely as possible (off of the haul road, if possible).

Precautions When Traveling In Reverse

Before operating the machine or work equipment, do as follows:

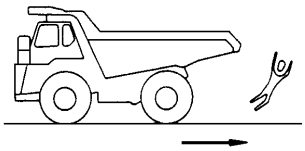

- Ensure the backup alarm works properly.
- Sound the horn to warn people in the area.
- Check for personnel near the machine. Do a thorough check behind the machine.
- When necessary, designate a person to watch the area for the truck operator. This is particularly necessary when traveling in reverse.
- When operating in hazardous areas and areas with poor visibility, designate a person to direct work site traffic.
- DO NOT allow any one to enter the line of travel of the machine. This rule must be strictly obeyed even with machines equipped with a back-up alarm or rear view mirror.

Traveling On Slopes

- Traveling on slopes could result in the machine tipping over or slipping.
- DO NOT change direction on slopes. To ensure safety, drive to level ground before turning.
- DO NOT travel up and down on grass, fallen leaves, or wet steel plates. These materials may make the machine slip on even the slightest slope. Avoid traveling sideways, and always keep travel speed low.
- When traveling downhill, use the retarder to reduce speed. DO NOT turn the steering wheel suddenly. DO NOT use the foot brake except in an emergency.
- If the engine should stop on a slope, apply the service brakes fully and stop the machine. Apply the parking brake after the machine has stopped.

Ensuring Good Visibility

- When working in dark places, install work lamps and head lamps.
- Discontinue operations if visibility is poor, such as in mist, snow, or rain. Wait for the weather to improve to allow the operation to be performed safely.

Operating On Snow

- When working on snowy or icy roads, there is danger that the machine may slip to the side on even the slightest slope. Always travel slowly and avoid sudden starting, turning, or stopping in these conditions.
- Be extremely careful when clearing snow. The road shoulder and other objects are buried in the snow and cannot be seen. When traveling on snow-covered roads, always install tire chains.

Avoid Damage To The Dump Body

- When working in tunnels, on bridges, under electric cables, or when entering an enclosed area where there are height limits, always use extreme caution. The dump body must be completely lowered before driving.

⚠WARNING

Driving with a raised dump body or raising the dump body in an enclosed area, may result in serious damage and bodily injury or death. Always drive with the dump body resting on the frame.

Driving Near High Voltage Cables

- Driving near high-voltage cables can cause electric shock. Always maintain the safe distances between the machine and the electric cable as listed below.

Voltage	Minimum Safe Distance	
6.6 kV	3 m	10 ft.
33.0 kV	4 m	14 ft.
66.0 kV	5 m	17 ft.
154.0 kV	8 m	27 ft.
275.0 kV	10 m	33 ft.

The following actions are effective in preventing accidents while working near high voltages:

- Wear shoes with rubber or leather soles.
- Use a signalman to give warning if the machine approaches an electric cable.
- If the work equipment should touch an electric cable, the operator should not leave the cab.
- When performing operations near high voltage cables, DO NOT allow anyone to approach the machine.
- Check with the electrical maintenance department about the voltage of the cables before starting operations.

When Loading The Truck

- Ensure the surrounding area is safe. If so, stop the machine in the correct loading position and evenly load the body.
- DO NOT leave the operator's seat during the loading operation.

When Dumping

- Before starting the dumping operation, check that there is no person or objects behind the machine.
- Stop the machine in the desired location. Check again for persons or objects behind the machine. Give the determined signal, then slowly operate the dump body. If necessary, use blocks for the wheels or position a flagman.
- When dumping on slopes, machine stability is poor and there is danger of tip over. Always perform such operations using extreme care.
- Never travel with the dump body raised.

Working On Loose Ground

- Avoid operating the machine near cliffs, overhangs, and deep ditches. If these areas collapse, the machine could fall or tip over and result in serious injury or death. Remember that ground surfaces in these areas may be weakened after heavy rain or blasting.
- Freshly laid soil and the soil near ditches is loose. It can collapse under the weight or vibration of the machine. Avoid these areas whenever possible.

Parking The Machine

- Choose a horizontal road surface to park the machine. If the machine has to be parked on a slope, always put blocks under all the wheels to prevent the machine from moving.
- When parking on public roads, provide fences and signs, such as flags or lights, on the machine to warn pedestrians and other vehicles. Be sure that the machine, flags, or lights DO NOT obstruct the traffic.

Before leaving the machine, lower the dump body fully, activate the parking brake, stop the engine, and lock everything. Always take the key with you.

TOWING

- Improper towing methods may lead to serious personal injury and/or damage.
- Use a towing device with ample strength for the weight of this machine.
- Never tow a machine on a slope.
- When connecting a machine to be towed, DO NOT allow anyone to go between the tow machine and the disabled machine.
- Set the coupling of the machine being towed in a straight line with the towing portion of the tow machine, and secure it in position.
- DO NOT stand next to the towing device while the truck is moving.

(For towing method, see the Operation and Maintenance Manual, Section 3, Operating Instructions - Towing.)

WORKING NEAR BATTERIES

Battery Hazard Prevention

- Battery electrolyte contains sulfuric acid and can quickly burn the skin and eat holes in clothing. If electrolyte comes in contact with skin, immediately flush the area with water.
- Battery acid can cause blindness if splashed into the eyes. If acid gets into the eyes, flush them immediately with large quantities of water and see a doctor immediately.
- If acid is accidentally ingested, drink a large quantity of water, milk, beaten eggs or vegetable oil. Call a doctor or poison prevention center immediately.
- Always wear safety glasses or goggles when working with batteries.
- Batteries generate hydrogen gas. Hydrogen gas is very explosive and is easily ignited with a small spark of flame.

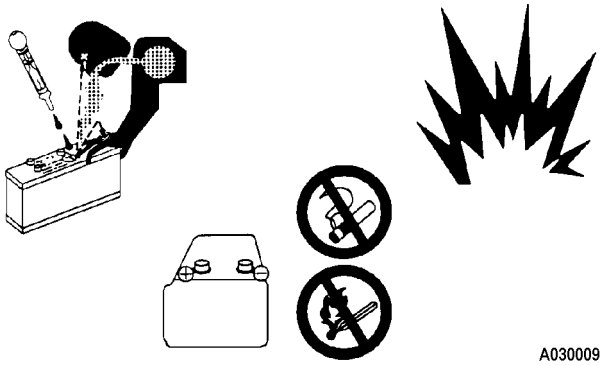

- Before working with batteries, stop the engine and turn the key switch to the OFF position.
- Avoid short-circuiting the battery terminals through accidental contact with metallic objects, such as tools, across the terminals.
- When removing or installing a battery, positively identify the positive (+) terminal and negative (-) terminal and use precautions not to short circuit the terminals.
- Tighten battery caps securely.
- Tighten battery terminals securely. Loose terminals can generate sparks and lead to an explosion.

Jump Starting With Booster Cables

- Always wear safety glasses or goggles when starting the machine with booster cables.
- While jump starting with another machine, DO NOT allow the two machines to touch.
- Be sure to connect the positive (+) cable first when installing booster cables. Disconnect the ground or negative (-) cable first during removal.

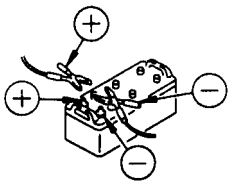

- If any tool touches between the positive (+) terminal and the chassis, it will cause sparks. Always use caution when using tools near the battery.
- Connect the batteries in parallel: positive to positive and negative to negative.
- When connecting the ground cable to the frame of the disabled machine, connect the ground as far as possible from the battery.

PRECAUTIONS FOR MAINTENANCE

BEFORE PERFORMING MAINTENANCE

Stopping The Engine Before Service

- Before performing inspections or maintenance, stop the machine on firm flat ground, lower the dump body, stop the engine and apply the parking brake. Put blocks under the wheels.
- If the engine must be operated during service, always move the shift control lever to the NEUTRAL position and apply the parking brake. Always perform this work with two people. One person must sit in the operator's seat to stop the engine if necessary. Never move any controls not related to the task at hand during these situations.
- When servicing the machine, use care not to touch any moving parts. Never wear loose clothing.
- When performing service with the dump body raised, always place the dump lever in the HOLD position, and apply the lock (if equipped). Install the body-up safety pins or cable securely.

Warning Tag

- Never start the engine or operate the controls while a person is performing maintenance. Serious injury or death may result.

- Always attach a warning tag to the control lever in the operator's cab to alert others that you are working on the machine. Attach additional warning tags around the machine, if necessary.
- These tags are available from your Komatsu distributor.
- Part No. 09963-03000

Proper Tools

- Use only tools suited to the task. Using damaged, low quality, faulty, or makeshift tools can cause personal injury.

- Extra precaution should be used when grinding, welding, and using a sledge-hammer.

Securing The Dump Body

WARNING

Any time personnel are required to perform maintenance on the vehicle with the dump body in the raised position, the body-up retention cable MUST be installed.

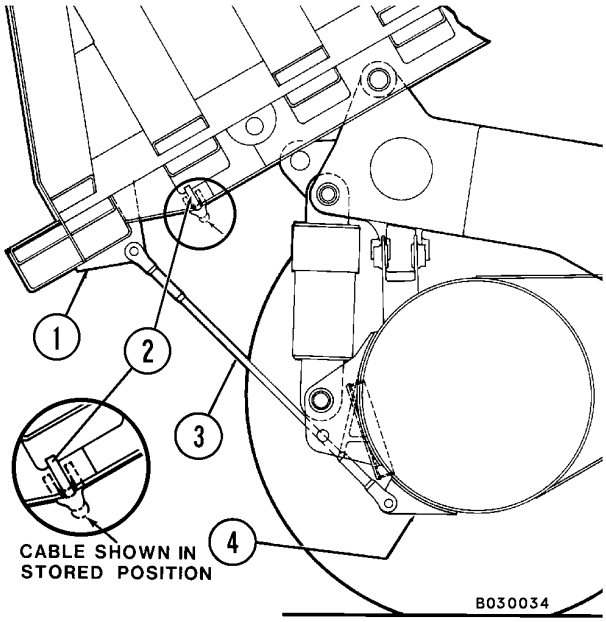

1. To hold the dump body in the up position, raise the body to it's maximum height.
2. Remove cable (3) from its stored position on the body, and install between rear body ear (1) and axle housing ear (4).
3. Secure the cable clevis pins with cotter pins.
4. Return the cable to stored position (2) after maintenance is complete.

DURING MAINTENANCE

Personnel

- Only authorized personnel can service and repair the machine.

Attachments

- Place attachments that have been removed from the machine in a safe place and manner to prevent them from falling.

Working Under The Machine

- Always lower all movable work equipment to the ground or to their lowest position before performing service or repairs under the machine.
- Always block the tires of the machine securely.
- Never work under the machine if the machine is poorly supported.

Keeping The Machine Clean

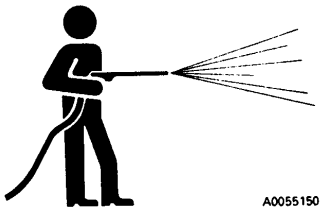

- Spilled oil or grease, scattered tools, etc. can cause you to slip or trip. Always keep your machine clean and tidy.
- If water gets into the electrical system, there is danger that the machine may move unexpectedly and/or damage to components may occur. DO NOT use water or steam to clean any sensors, connectors, or the inside of the operator's compartment.
- Use extreme care when washing the electrical control cabinet. DO NOT allow water to enter the control cabinet around the doors or vents. DO NOT allow any water to enter the cooling air inlet duct above the electrical control cabinet. If water enters the control cabinet (through any opening or crevice) major damage to the electrical components may occur.
- Never spray water into the rear wheel electric motor covers. Damage to the wheel motor armatures may occur.
- DO NOT spray water into the retarding grids. Excess water in the retarding grids can cause a ground fault, which will prevent propulsion.

Rules To Follow When Adding Fuel Or Oil

- Spilled fuel and oil may cause slipping. Always clean up spills, immediately.
- Always tighten the cap of the fuel and oil fillers securely.
- Never use fuel for washing any parts.
- Always add fuel and oil in a well-ventilated area.

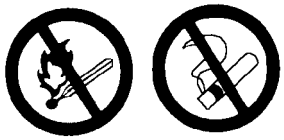

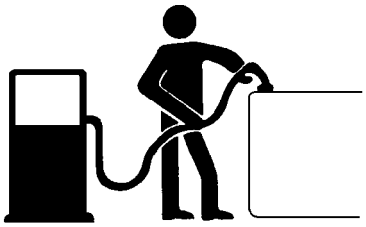

Radiator Coolant Level

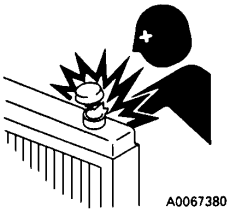

- If it is necessary to add coolant to the radiator, stop the engine, and allow the engine and radiator to cool down before adding the coolant.
- Depress the pressure relief button on the radiator cap.
- Slowly loosen the cap to relieve pressure during removal.

Use Of Lighting

- When checking fuel, oil, coolant, or battery electrolyte, always use lighting with anti-explosion specifications. If lighting without this protection is used, there is a danger of explosion.

Precautions With The Battery

- When repairing the electrical system or when performing electrical welding, remove the negative (-) terminal of the battery to stop the flow of current.

Handling High Pressure Hoses

- DO NOT bend high-pressure hoses or hit them with hard objects. DO NOT use any bent or cracked piping, tubes or hoses. They may burst during use.
- Always repair any loose or broken hoses. Fuel and/or oil leaks may result in a fire.

Precautions With High Pressure Oil

- Always remember that work equipment circuits are always under pressure.
- DO NOT add oil, drain oil, or perform maintenance or inspections before completely releasing the internal pressure.

- Small, high pressure pin-hole leaks are extremely dangerous. The jet of high-pressure oil can pierce the skin and eyes. Always wear safety glasses and thick gloves. Use a piece of cardboard or a sheet of wood to check for oil leakage.
- If you are hit by a jet of high-pressure oil, consult a doctor immediately for medical attention.

Maintenance Near High Temperatures And High Pressures

- Immediately after stopping operation, the engine coolant and operating oils are at high temperature and under high pressure. In these conditions, opening the system or replacing filters may result in burns or other injury. Wait for the temperature to cool and pressure to subside before performing the inspection and/or maintenance as outlined in the service manual.

Rotating Fan And Belts

- Keep a safe distance from rotating parts such as the radiator fan and fan belts.
- Serious bodily injury may result from direct or indirect contact with rotating parts and flying objects.

Waste Materials

- Never dump oil or other harmful fluids into a sewer system, rivers, etc.
- Obey appropriate laws and regulations when disposing of harmful objects such as oil, fuel, coolant, solvent, filters, batteries, and others.

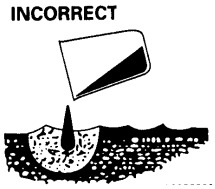

- Always put fluids drained from your machine in appropriate containers. Never drain fluids directly onto the ground.

TIRES

Handling Tires

If tires are not used under the specified conditions, they may overheat and burst, or be cut and burst by sharp stones on rough road surfaces. This may lead to serious injury or damage.

To maintain tire safety, always adhere to the following conditions:

- Inflate the tires to the specified pressure. Abnormal heat is generated particularly when the inflation pressure is too low.
- Use the specified tires.

The tire inflation pressure and permissible speeds are general values. The actual values may differ depending on the type of tire and the condition under which they are used. For details, please consult the tire manufacturer.

When tires become hot, a flammable gas is produced, and may ignite. It is particularly dangerous if the tires become overheated while the tires are pressurized. If the gas generated inside the tire ignites, the internal pressure will suddenly rise, and the tire will explode, resulting in danger to personnel in the area. Explosions differ from punctures or tire bursts because the destructive force is extremely large. Therefore, the following operations are strictly prohibited when the tire is pressurized:

- Welding the rim
- Welding near the wheel or tire.
- Smoking or creating open flames

If the proper procedure for performing maintenance or replacement of the wheel or tire is not used, the wheel or tire may burst and cause serious injury or damage. When performing such maintenance, consult your authorized regional Komatsu distributor, or the tire manufacturer.

Storing Tires After Removal

- As a basic rule, store the tires in a warehouse in which unauthorized persons cannot enter. If the tires are stored outside, always erect a fence around the tires and put up “No Entry” and other warning signs that even young children can understand.
- Stand the tire on level ground, and block it securely so that it cannot roll or fall over.
- If the tire should fall, flee the area as quickly as possible. The tires for mining equipment are extremely heavy. Never attempt to hold a tire upright when the tire is falling. This may lead to serious injury or death.

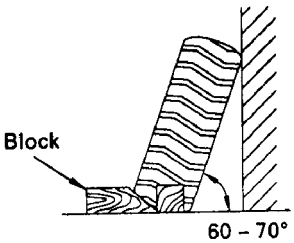

A030008

ADDITIONAL JOB SITE RULES

- Use this space to add any additional job site rules not covered in any of the previous discussions.

WHEN REPAIRS ARE NECESSARY

1. Only qualified maintenance personnel who understand the systems being repaired should attempt repairs.
2. Many components on the Komatsu truck are large and heavy. Ensure that lifting equipment - hoists, slings, chains, lifting eyes - are of adequate capacity to handle the lift.
3. DO NOT stand under a suspended load. DO NOT work under raised body unless body safety cables, props, or pins are in place to hold the body in up position.
4. DO NOT repair or service the truck while the engine is running, except when adjustments can only be made under such conditions. Keep a safe distance from moving parts.
5. When servicing any air conditioning system with refrigerant, wear a face shield and cold resistant gloves for protection against freezing. Be certain to follow all current regulations for handling and recycling refrigerants.
6. Follow package directions carefully when using cleaning solvents.
7. If an auxiliary battery assist is needed, first use one cable to connect the 24V positive (+) post of the disabled truck batteries to the 24V positive (+) post of the auxiliary assist. Use second cable to connect the 24V negative (-) post of the auxiliary assist battery to a frame ground (-) on the disabled truck away from the battery.
8. Always disconnect the positive and negative battery cables of the vehicle before doing any welding on the unit. Failure to do so may seriously damage the battery and electrical equipment. Disconnect the battery charging alternator lead wire and isolate electronic control components before making welding repairs. (It is not necessary to disconnect or remove any control circuit cards on electric drive dump trucks or any of the Alarm Indicating Device (AID) circuit control cards.)

   Always fasten the welding machine ground (-) lead to the piece being welded; the grounding clamp must be attached as near as possible to the weld area. Never allow welding current to pass through ball bearings, roller bearings, suspensions, or hydraulic cylinders. Always avoid laying welding cables over or near the vehicle electrical harnesses. Welding voltage could be induced into the electrical harness and cause damage to components.
9. If the truck is to be towed for any reason, use a rigid tow bar. Check the truck cab for decals for special towing precautions. (Also refer to the Operation and Maintenance Manual, Operating Instructions - Towing.)
10. Drain, clean and ventilate fuel tanks and/or hydraulic tanks before making any welding repairs.

⚠WARNING

Any operating fluid, such as hydraulic oil or brake fluid escaping under pressure, can have sufficient force to enter a person's body by penetrating the skin. Serious injury and possibly death may result if proper medical treatment by a physician familiar with this injury is not received immediately.

11. Relieve pressure in lines or hoses before making any disconnects.
12. After adjustments or repairs, replace all shields, screens and clamps.
13. Working near tires can be dangerous. Use extreme caution when working around tires.

⚠WARNING

DO NOT stand in front of a rim and locking ring when inflating a tire mounted on the machine. Observers must not be permitted in the area.

DO NOT weld or apply heat to the rim assembly with the tire mounted on the rim. Resulting gases inside the tire may ignite, causing explosion of the tire and rim.

14. Only a qualified operator or experienced maintenance personnel who are also qualified in operation can move the truck under its own power in the repair facility or during road testing after repairs are complete.

SPECIAL PRECAUTIONS FOR WORKING ON A 930E TRUCK

Preliminary Procedures before Welding or Performing Maintenance

Prior to welding and/or repairing a 930E dump truck, maintenance personnel should attempt to notify a Komatsu service representative. Only qualified personnel, specifically trained for servicing the A-C drive system, should perform this service.

If it is necessary to perform welding or repair to the truck without the field engineer present, the following procedures should be followed to ensure that the truck is safe for maintenance personnel to work on and to reduce the chance for damage to equipment.

⚠DANGER

Anytime the engine is operating:

- ***DO NOT open any of the cabinet doors or remove any covers.***
- ***DO NOT use any of the power cables for hand holds or foot steps.***
- ***DO NOT touch the retarding grid elements.***

⚠WARNING

Before opening any cabinets or touching a grid element or a power cable, the engine must be shutdown and the red drive system warning lights must not be illuminated.

Normal Engine Shutdown Procedure

1. Stop the truck out of the way of other traffic on a level surface (dry, if possible) and free of overhead power lines or other obstructions (in case the dump body should need to be raised).
   a. Reduce engine speed to idle. Allow the engine to cool gradually by running at low idle for approximately 5 minutes.
   b. Place the selector switch in NEUTRAL.
   c. Apply the parking brake. Be sure the parking brake applied indicator light in the overhead display panel is illuminated.
2. Turn the rest switch to the ON position to put the A-C drive system in “rest” mode of operation. Be sure the “rest” indicator light in the overhead panel is illuminated.
3. After the engine cools, turn the key switch counterclockwise to OFF for normal engine shutdon.

   If the engine does not shutdown with the key switch, use the engine shutdown switch on the center console. Pull the switch up until the engine stops. Push the switch back down to allow future engine operation.
4. With the key switch OFF, and the engine stopped, wait at least 90 seconds. Ensure the steering circuit is completely bled down by turning the steering wheel back and forth several times. No front wheel movement will occur when hydraulic pressure is relieved. If the vehicle continues to steer after shutdown, notify maintenance personnel.
5. Verify that all the link voltage lights are off (one on back wall of operator cab, and two on deck control cabinets). Notify maintenance personnel if any light remains illuminated longer than five minutes after engine shutdown.
6. Close and lock all windows, remove the key from the key switch, and lock the cab to prevent possible unauthorized truck operation. Dismount the truck properly. Place wheel chocks around the wheels.

Engine Shutdown Procedure before Welding or Performing Maintenance

Normal operation of the drive system at shutdown should leave the system safe to maintain. However, in the event of a system failure, performing the following procedure prior to any maintenance activities will ensure that no hazardous voltages are present in the A-C drive system.

1. Before shutting down the engine, verify the status of all the drive system warning lights on the overhead display panel. Use the lamp test switch to verify that all lamps are functioning properly.

   If any of the red drive system warning lights remain on, DO NOT attempt to open any cabinets, disconnect any cables, or reach inside the retarder grid cabinet without a trained drive system technician present - even if engine is off.

   Only qualified personnel, specifically trained for servicing the A-C drive system, should perform this service.
2. If all red drive system warning lights are off, follow the “Normal Engine Shutdown Procedure”.

3. After the engine has been off for at least five minutes, inspect the link voltage lights on the exterior of the main control cabinet and back wall of the operator's cab (DID panel). If all lights are off, the retard grids, wheel motors, alternator, and related power cables are safe to work on.
4. Locate the GF cut-out switch in the access panel on the left side of the main control cabinet. Place the switch in the CUTOUT position. This will prevent the alternator from re-energizing and creating system voltage until the switch is returned to the previous position.
5. Before welding on the truck, disconnect all electrical harnesses from the Engine Control System (ECS) inside the electrical cabinet behind the operator's cab. Also, disconnect the ground strap from the ECS.
6. DO NOT weld on the rear of the control cabinet! The metal panels on the back of the cabinet are part of capacitors and cannot be heated.
7. DO NOT weld on the retard grid exhaust louvers - they are made of stainless steel. Some power cable panels throughout the truck are also made of aluminum or stainless steel. They must be repaired with the same material or the power cables may be damaged.
8. Power cables must be cleated in wood or other non-ferrous materials. DO NOT repair cable cleats by encircling the power cables with metal clamps or hardware. Always inspect power cable insulation prior to servicing the cables and prior to returning the truck to service. Discard cables with broken insulation.
9. Power cables and wiring harnesses should be protected from weld spatter and heat.

   Always fasten the welding machine ground (-) lead to the piece being welded; the grounding clamp must be attached as near as possible to the weld area.

   Always avoid laying welding cables over or near the vehicle electrical harnesses. Welding voltage could be induced into the electrical harness and cause damage to components.

   Before doing any welding on the truck, always disconnect the battery charging alternator lead wire and isolate electronic control components.

   In addition, always disconnect the positive and negative battery cables of the vehicle. Failure to do so may seriously damage the battery and electrical equipment.

   Never allow welding current to pass through ball bearings, roller bearings, suspensions, or hydraulic cylinders.
10. If the red lights on the exterior of the control cabinet and/or the back wall of the operator's cab continue to be illuminated after following the above procedure, a fault has occurred.

    Leave all cabinet doors in place; DO NOT touch the retard grid elements; DO NOT disconnect any power cables, or use them as hand or foot holds.

⚠WARNING

Notify your Komatsu service representative, immediately. Only qualified personnel, specifically trained for servicing the A-C drive system, should perform this service.

11. Replace all covers and doors and place the GF cutout switch and battery disconnect switches in their original positions. Reconnect all harnesses prior to starting the truck.

    Leave the drive system in the rest mode until the truck is to be moved.

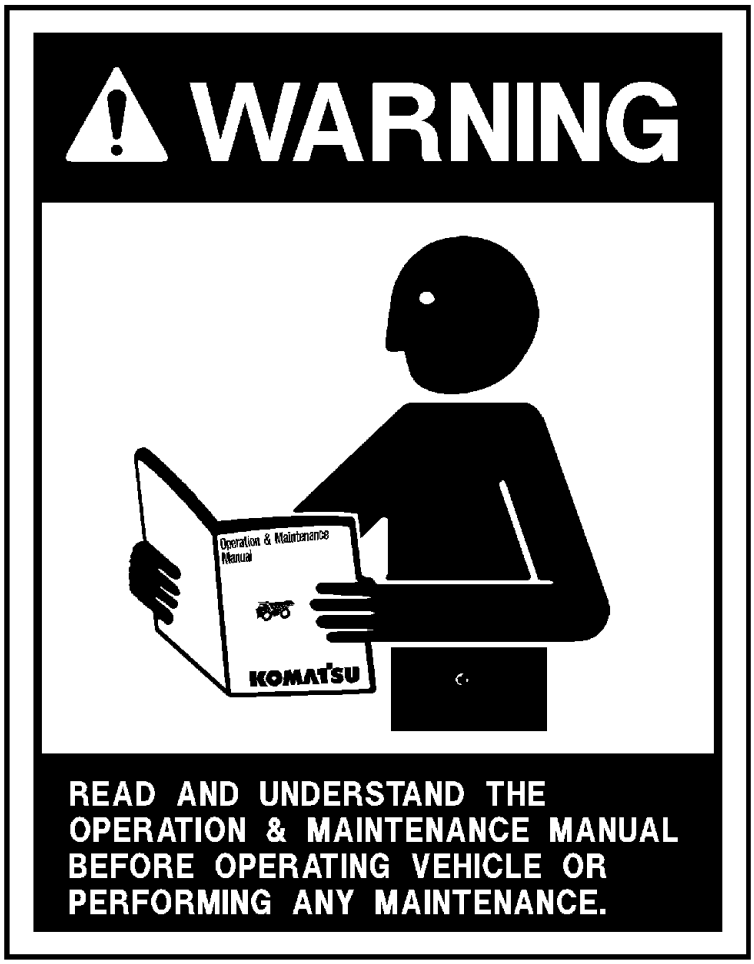
WARNING
Operation & Maintenance Manual
KOMATSU
READ AND UNDERSTAND THE OPERATION & MAINTENANCE MANUAL BEFORE OPERATING VEHICLE OR PERFORMING ANY MAINTENANCE.

NOTES

WARNINGS AND CAUTIONS

The following pages give an explanation of the warning, caution, and service instruction plates and decals attached to the truck. The plates and decals listed here are typical of this Komatsu model, but because of customer options, individual trucks may have plates and decals that are different from those shown here.

The plates and decals must be kept clean and legible. If any decal or plate becomes damaged or illegible, it should be replaced with a new one.

A warning decal surrounds the key switch located to the right of the steering column on the instrument panel. The warning stresses the importance of reading the operator's manual before operation.

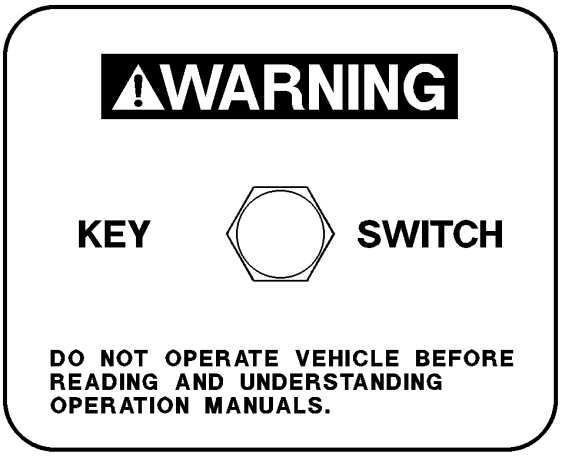

A grade/speed retard chart is located on the left front post of the operator's cab. It provides the recommended maximum speeds to be used when descending various grades with a loaded truck. Always refer to the decal in operator's cab. This decal may change with optional truck equipment such as wheel motor drive train ratios, retarding grids, tire sizes, etc.

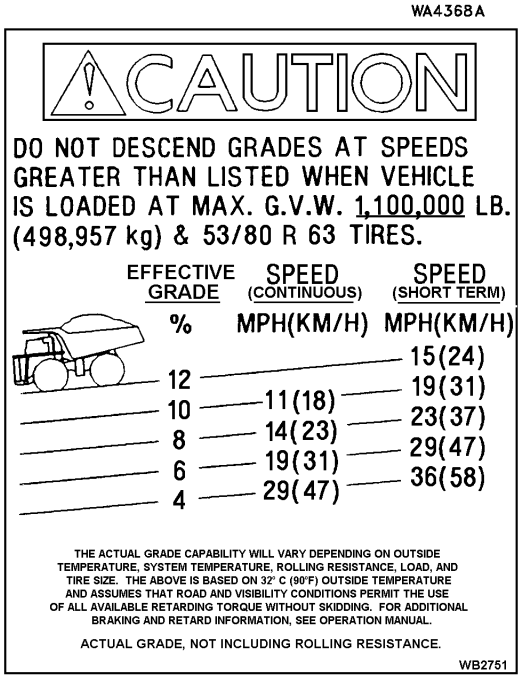

A plate attached to the right rear corner of the cab states that the Rollover Protective Structure (ROPS) and Falling Object Protective Structure (FOPS) meet various SAE performance requirements.

! WARNING ! Do not make modifications to this structure or attempt to repair damage without written approval from Komatsu. Unauthorized repairs will void certification.

A warning instruction decal is applied below the parking brake switch and rear wheel brake lock switch, which are located to the right of the steering column on the instrument panel. Pushing the top of the rocker switch turns the function ON; pushing the bottom turns it OFF.

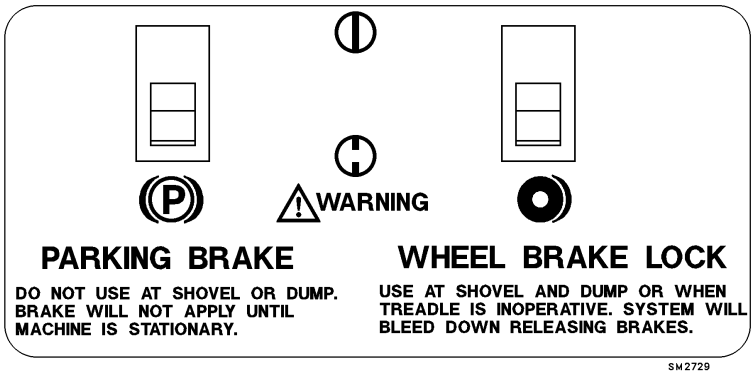

The parking brake is spring applied and hydraulically released. It is designed to hold a stationary truck when the engine is shutdown and the key switch is turned OFF. The truck must be completely stopped before applying the parking brake or damage may occur to parking brake. To apply the parking brake, press the rocker switch toward the ON symbol. To release the parking brake, press the rocker switch toward the OFF symbol. When the key switch is ON and the parking brake switch is applied, the parking brake indicator light (A3, overhead panel) will be illuminated.

NOTE: Do not use the parking brake during loading or dumping operations. With key switch ON and engine running, sudden shock caused by loading or dumping could cause the system's motion sensor to release the parking brake.

The wheel brake lock switch is designed to hold the truck while parked at the shovel during loading or while dumping. It applies the **rear service brakes only**. If the brake treadle valve does not operate, apply this brake to stop the truck. DO NOT use this brake as a parking brake when leaving the truck. With engine shut down, the hydraulic system will eventually bleed down, releasing the service brakes.

Attached to the exterior of both battery compartments is a danger plate. This plate stresses the need to keep from making any sparks near the battery. When another battery or 24VDC power source is used for auxiliary power, all switches must be OFF before making any connections. When connecting auxiliary power cables, positively maintain correct polarity. Connect the positive (+) posts together and then connect the negative (-) lead of the auxiliary power cable to a good frame ground. **Do not connect to the negative posts of the truck battery or near the battery box.** This hookup completes the circuit but minimizes the danger of sparks near the batteries.

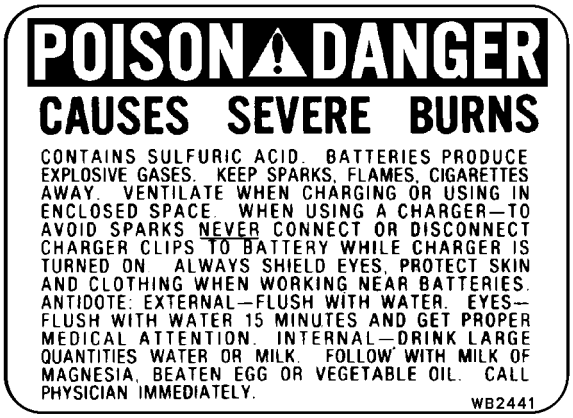

Sulfuric acid is corrosive and toxic. Use proper safety gear, goggles, rubber gloves and a rubber apron when handling and servicing batteries. If sulfuric acid is swallowed, gets into your eyes or contacts your skin, get proper medical help immediately.

This plate is placed on both battery boxes and near the battery disconnect switches to indicate that the battery system (24VDC) is a negative (-) ground system.

These decals are placed above the battery disconnect switches on the right side of the front bumper to indicate OFF and ON positions of the switches.

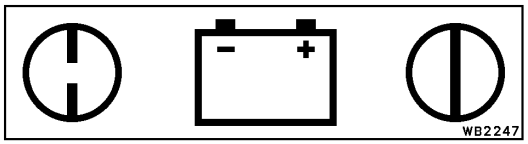

A warning plate is mounted on top of the radiator surge tank cover near the radiator cap. The engine cooling system is pressurized. **Always turn the key switch OFF and allow the engine to cool before removing the radiator cap.** Unless the pressure is first released, removing the radiator cap after the engine has been running for a time will result in hot coolant being expelled from the radiator. **Serious scalding and burning may result.**

WARNING

SYSTEM IS PRESSURIZED BECAUSE OF THERMAL EXPANSION OF COOLANT. "DO NOT" REMOVE RADIATOR CAP WHILE ENGINE IS HOT. SEVERE BURNS MAY RESULT.

WB2452

Warning plates are mounted on the frame in front of both front tires and to the rear of both front tires. They warn that the clearances change when the truck is steered and could cause serious injury.

WARNING

STAY CLEAR. CLEARANCE REDUCED WHEN MACHINE IS STEERED. MOVING COMPONENTS MAY CAUSE CRUSHING.

WB2448

Warning plates are attached to both the hydraulic tank and fuel tank to alert technicians not to work on the truck with the body in the raised position unless the body-up retention device (pins or cable) is in position.

WARNING

DO NOT WORK UNDER RAISED BODY UNLESS SAFETY DEVICE(S) ARE IN POSITION.

WB2437

These danger plates are mounted on the outside of each frame rail to remind technicians to read the warning labels attached to the side of each of the accumulators (see below) before releasing internal nitrogen pressure or disconnecting any hydraulic lines or hardware. There are similar decals mounted on top of each of the accumulators (both steering and brake) with the same danger message.

DANGER

HIGH PRESSURE CYLINDER

READ WARNING LABEL MOUNTED ON SIDE OF ACCUMULATOR HOUSING BEFORE LOOSENING OR DISASSEMBLING ANY PARTS

WB2438

These warning decals are mounted on the side of each of the accumulators (both steering and brake) to alert technicians to discharge all gas and hydraulic pressure, and to read the maintenance/service manual before performing any service.

WARNING

HIGH PRESSURE GAS CHARGED CYLINDER – DISCHARGE GAS AND HYDRAULIC PRESSURE BEFORE SERVICING.

SEE MAINTENANCE MANUAL FOR CORRECT SERVICE PROCEDURE.

TY5888

This danger plate is attached to all four suspensions. It contains instructions for releasing internal pressure before disconnecting any hardware. Serious injury can occur if these directions are not followed.

⚠ DANGER

HIGH PRESSURE CYLINDER CHARGED WITH DRY NITROGEN

DO NOT REMOVE ANY HARDWARE INCLUDING CAPSCREWS, PLUGS, VALVE, OR VALVE CORE UNTIL ALL PRESSURE HAS BEEN RELEASED. REMOVAL OF ANY HARDWARE WHILE CYLINDER IS UNDER PRESSURE MAY RESULT IN HARDWARE FLYING VIOLENTLY FROM CYLINDER. TO RELEASE PRESSURE, REMOVE VALVE CAP, TURN TOP HEX ON VALVE THREE TURNS IN A COUNTERCLOCKWISE DIRECTION (DO NOT TURN MORE THAN THREE TURNS), THEN DEPRESS VALVE CORE. DO NOT TURN BOTTOM HEX UNTIL ALL PRESSURE HAS BEEN RELEASED.

1. CHECK OIL LEVEL ACCORDING TO INSTRUCTION MANUAL.
2. CHARGE CYLINDER WITH DRY NITROGEN GAS ONLY.

TO CHARGE CYLINDER: SEE YOUR HAULPAK® DISTRIBUTOR WHO HAS ALL TOOLS AND INFORMATION REQUIRED FOR CHARGING CYLINDERS.

WA2892

A plate mounted on the side of the hydraulic tank provides instructions for filling the hydraulic tank.

To lessen the chances of system contamination, keep the system open to the atmosphere only as long as absolutely necessary. Service the tank with clean Type C-4 hydraulic oil. All oil that is being put into the hydraulic tank should be filtered through 3 micron filters.

ATMOSPHERIC BREATHER SYSTEM

FILLING INSTRUCTIONS:

1. WITH ENGINE STOPPED, KEY SWITCH OFF AND BODY DOWN, FILL TANK TO TOP SIGHT GLASS.
2. RAISE AND LOWER BODY 3 TIMES.
3. REPEAT STEPS 1 AND 2 AND ADD OIL UNTIL LEVEL IS AGAIN AT TOP SIGHT GLASS.
4. OIL MUST BE VISIBLE IN UPPER SIGHT GLASS WITH ENGINE STOPPED. BODY DOWN AND KEY OFF FOR 90 SECONDS. OIL MUST BE VISIBLE IN LOWER SIGHT GLASS WITH ENGINE RUNNING AND BODY DOWN. REPEAT STEP 1 IF NECESSARY.

WB2724

A caution decal is attached below the hydraulic tank oil level sight gauge. Check the oil level with the body down, engine stopped, and key switch OFF. Add oil per filling instructions if the oil level is below the top of the sight glass.

⚠ CAUTION

DO NOT ADD OIL UNLESS ENGINE IS STOPPED, KEY IS OFF, AND BODY IS DOWN

WA6628

A warning plate is attached to the hydraulic tank to warn technicians that high pressure hydraulic oil is present during operation. When it is necessary to open the hydraulic system, be sure the engine is stopped and the key switch is OFF to bleed down hydraulic pressure. There is always a chance of residual pressure being present. Open fittings slowly to allow all pressure to bleed off before removing any connections.

WARNING

HIGH PRESSURE

DO NOT LOOSEN OR DISCONNECT ANY HYDRAULIC LINE OR COMPONENT UNTIL ENGINE IS STOPPED AND KEY SWITCH IS OFF.

WB2439

⚠WARNING

Any operating fluid, such as hydraulic oil, escaping under pressure can have sufficient force to enter a person's body by penetrating the skin. Serious injury and possibly death may result if proper medical treatment by a physician familiar with this injury is not received immediately.

A wheel motor oil level decal is attached to the gear cover on both electric wheel motors. This decal stresses that the truck must be parked for 20 minutes prior to checking the oil level in order to get an accurate reading.

OIL FILL & CHECK PROCEDURE

CHECK OIL LEVEL ONLY AFTER TRUCK HAS BEEN PARKED FOR 20 MINUTES.
REMOVE LOWEST PLUG TO FILL AND CHECK LEVEL.
OIL LEVEL IS OK, IF OIL IS PRESENT.

WB2444

A decal which provides the operator or technician with the emergency procedure for dumping a loaded, disabled truck by using a functional truck for hydraulic power is located on the frame near the left hoist cylinder.

Refer to Section L in the shop manual for additional information about using this procedure.

EMERGENCY DUMP PROCEDURE

1. CONNECT A HYDRAULIC POWER SUPPLY CAPABLE OF 2500 PSI (17.2 MPa) WHICH HAS A RESERVE CAPACITY EXCEEDING 80 GAL. (303 l) TO THE QUICK DISCONNECTS ON L.H. HOIST CYLINDER.
2. PLACE HOIST VALVE IN HOLD POSITION.
3. DUMP LOAD AND LOWER BODY USING CONTROL VALVE ON HYDRAULIC POWER SUPPLY UNIT.

WB2246

Warning decals are applied to both brake accumulators located inside the brake system cabinet behind the operator cab. These decals remind servicing technicians to close the accumulator drain valves after they have been opened to bleed the brake pressure. It further warns not to overtighten the drain valves in order to prevent damage to the valve seat(s).

WARNING

ALWAYS CLOSE DRAIN VALVES AFTER DISCHARGING ACCUMULATORS.
DO NOT OVERTIGHTEN DRAIN VALVES.

WB2447

This caution decal is placed near the battery disconnect switches on the right side of the front bumper to alert service technicians to always disconnect the battery charging alternator lead wire before making welding repairs.

In addition, always isolate electronic control components and disconnect the positive and negative battery cables of the vehicle. Failure to do so may seriously damage the battery and electrical equipment.

CAUTION

PRIOR TO WELDING ON TRUCK DISCONNECT LEAD WIRE ON BATTERY CHARGING ALTERNATOR

WB2442

Always fasten the welding machine ground (-) lead to the piece being welded. **The grounding clamp must be attached as near as possible to the weld area**. Never allow welding current to pass through ball bearings, roller bearings, suspensions, or hydraulic cylinders. Always avoid laying welding cables over or near the vehicle electrical harnesses. Welding voltage could be induced into the electrical harness and possibly cause damage to components.

A high voltage danger plate is attached to the door of the rear hatch cover.

High voltage may be present! Only authorized personnel should access this rear housing.

A caution decal is also attached to the door of the rear hatch cover and around the retarding grid cabinet to alert personnel that hot exhaust air is present and may cause injury.

These warning plates are mounted on all the AC drive control housings and cabinets.

High voltage may be present with or without the engine running! Only authorized personnel should access these cabinets.

This caution decal is placed on the back of the control cabinet to alert service technicians that this area contains capacitors and must not be disturbed in any manner.

This information decal is placed on the outside of the door panel on the control cabinet wall that faces the right side of the operator cab.

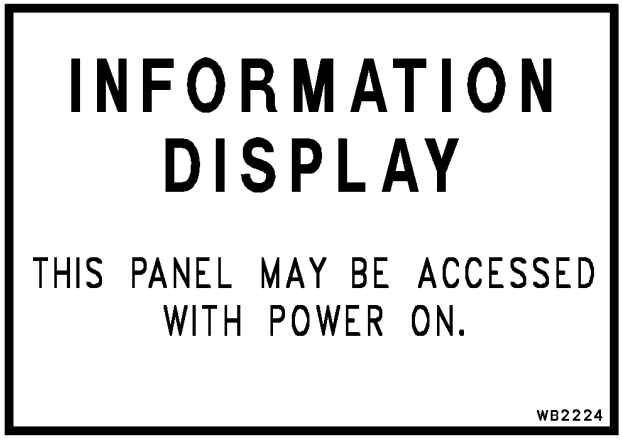

This decal is placed near three different indicator lights:

- In the operator cab, on the D.I.D. panel on the rear wall.
- On the front of the control box, which is mounted on the right side of the main control cabinet.
- On the outside of the left control cabinet wall that faces the right side of the operator cab. (See also information decal above.)

When any of these indicator lights are on, high voltage is present throughout the propulsion and retarding system. Extreme care should be exercised!

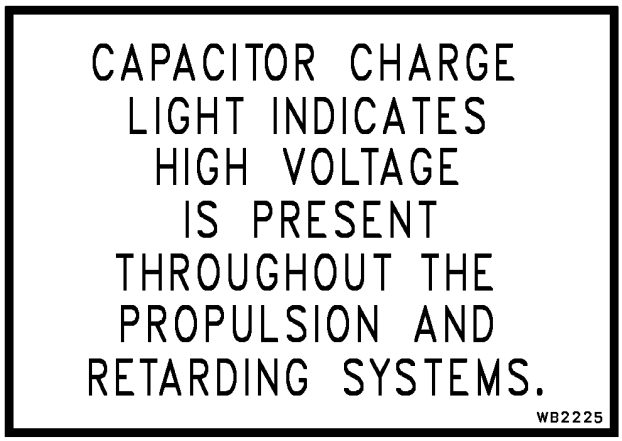

This decal is placed on the ground level engine shutdown switch, which is mounted on the right side of the front bumper structure. It specifies that this switch is for emergency shutdown only.

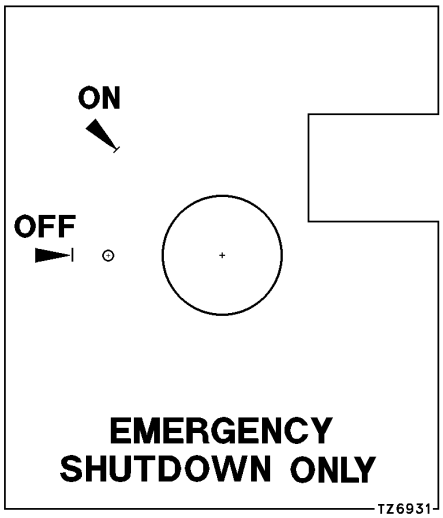

This page illustrates a variety of decals which are placed on deck mounted cabinets, housings, and structures that must be lifted in a specific manner and from specific points in order to safely move them.

If any of these decals is damaged or defaced so it is no longer legible, it should be replaced immediately.

Maintenance personnel must follow these lifting instructions.

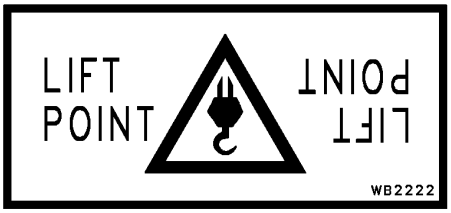

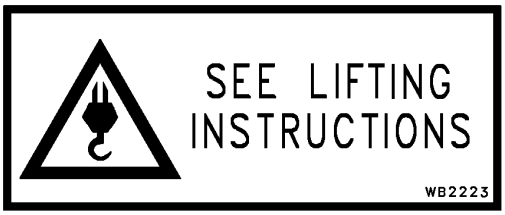

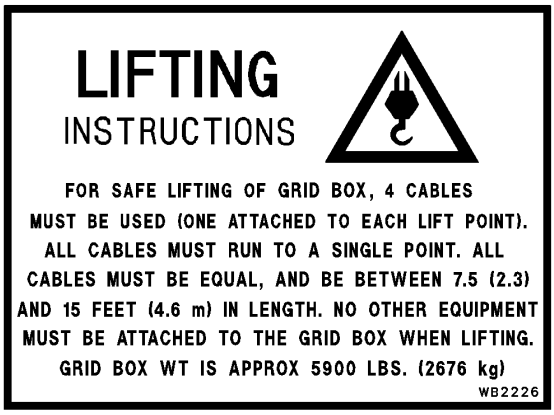

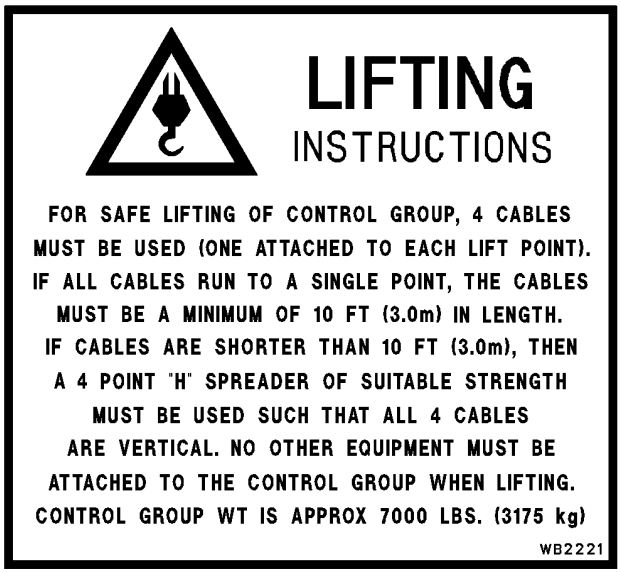

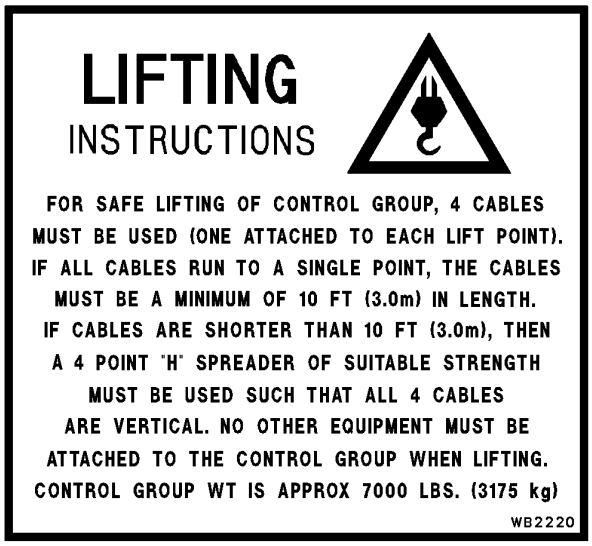

A product identification plate is located on the frame in front of the right side front wheel. It shows the Truck Model Number, Maximum G.V.W. and Product Identification Number (PIN).

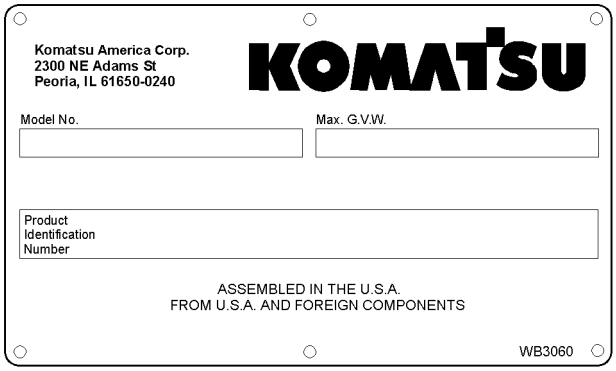

The Product Identification Number (PIN) consists of a total of 19 characters. The first and last characters are tamper preventive symbols (*). The remaining 17 alpha/numeric characters are used to identify the following five characteristics of the machine:

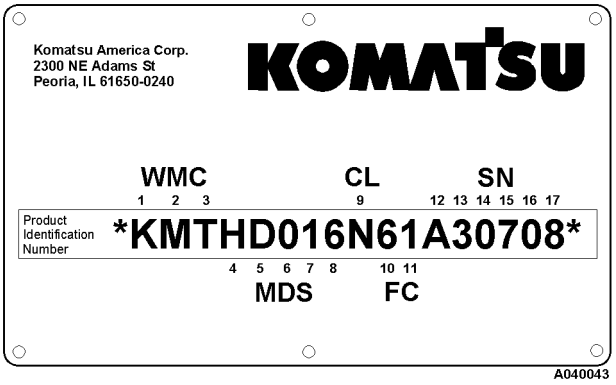

WMC - Character positions 1, 2 and 3 identify the Worldwide Manufacturer Code (WMC). The WMC designates the manufacturer of the product. Komatsu brand products are identified with the letters KMT.

MDS - Character positions 4, 5, 6, 7 and 8 identify the Machine Descriptor Section (MDS). The MDS code identifies general information regarding machine specifications. The MDS is a code for the machine type and model.

CL - Character position 9 identifies the Check Letter (CL). The CL is used to verify the accuracy of the individual PIN.

FC - Character positions 10 and 11 identify the Factory Code (FC). The FC identifies the Komatsu factory in charge of claims for the product. The FC for electric drive trucks is 61.

SN - Character positions 12, 13, 14, 15, 16 and 17 identify the Serial Number (SN). The SN is a unique sequential number.

The lubrication chart is mounted on the right hand side of the radiator grille structure. Refer to Section P, Lubrication and Service, in the shop manual for more complete lubrication instructions.

LUBRICATION CHART

LUBRICATION SPECIFICATIONS

LUBE KEY	TYPE LUBRICANT
A	ENGINE OIL - - - - - SEE ENGINE MANUAL
B	HYDRAULIC OIL - - - - - SAE 10W C - 4 - - - - - AUXILIARY HEATERS REQUIRED BELOW -10°F(-23°C)
C	HEAVY-DUTY SYNTHETIC GEAR OIL - - - - - SEE DRIVE SYSTEM MANUAL
D	MULTI - PURPOSE EXTREME PRESSURE GREASE - - - - - NLGI NO.2 (5% MIN. MOLY-DISULFIDE)
E	MULTI - PURPOSE GEAR OIL - - - - - SAE 80W - 90

SYM	DESCRIPTION	PTS	LUBE KEY	10 HR	50 HR	100 HR	250 HR	500 HR	1000 HR	2000 HR	2500 HR
1	CRANKCASE OIL LEVEL	1	A	CHECK							
2	ENGINE LUBE OIL FILTERS	SEE ENGINE MANUAL									
3	FUEL FILTER										
4	FUEL SEPERATOR (DAVCO)										
5	FUEL TANK	1					DRAIN H_2O & SEDIMENT				
6	GE PREFILTER BLOWER	1	D				GREASE				
7	FUEL TANK BREATHER	1							CLEAN		
8	HYDRAULIC OIL LEVEL	1	B	CHECK					*CHANGE		
9	HYDRAULIC STRAINER	2							CLEAN		
10	HYDRAULIC TANK BREATHER	2						CHANGE			
11	HYDRAULIC FILTERS	3			**	**	**	CHANGE			
12	MOTORIZED WHEEL OIL LEVEL	2	C	SEE DRIVE SYSTEM MANUAL							
13	HYD. PUMP DRIVE SHAFT	2	D				GREASE				
14	CHASSIS LUBE LEVEL	1	D				GREASE				
15	SEAT SLIDES & STEER SHAFT	4	D						GREASE		
16	WHEEL MOTOR BLOWER	2	D				GREASE				
17	FRONT WHEEL BEARINGS ***	2	E				CHECK				CHANGE
18	FRONT TRUNION	1	D						GREASE		
19	MAGNETIC PLUG FRONT WHL COVER ****	2					CHECK				

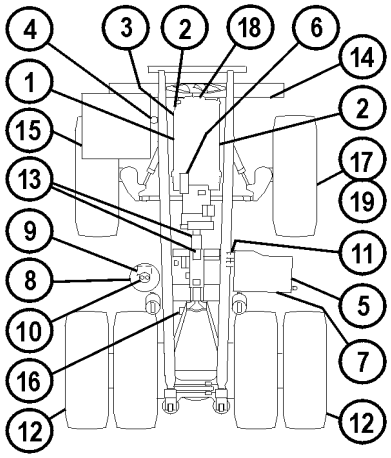

630E, 730E, 830E, & 930E

* 1000 HR INTERVAL CAN BE EXTENDED TO 2500 HR PROVIDED OIL SAMPLING AND ANALYSIS IS CONDUCTED EVERY 250 HR.
** ONE-TIME CHANGE AT 50, 100 AND 250 HR.
*** NOT APPLICABLE FOR 930E
**** APPLICABLE FOR 930E ONLY

WB2790

TRUCK OPERATION

PREPARING FOR OPERATION

The safest trucks are those which have been properly prepared for operation. At the beginning of each shift, a careful check of the truck should be made by the operator before starting the engine.

Safety Is Thinking Ahead

Prevention is the best safety program. Prevent a potential accident by knowing the employer's safety requirements, all necessary job site regulations, as well as use and care of the safety equipment on the truck. Only qualified operators or technicians should attempt to operate or maintain a Komatsu truck.

Safe practices start before the operator gets to the equipment!

- Wear the proper clothing. Loose fitting clothing, unbuttoned sleeves and jackets, jewelry, etc., can catch on a protrusion and cause a potential hazard.
- Always use the personal safety equipment provided for the operator such as hard hats, safety shoes, safety glasses or goggles. There are some conditions when protective hearing devices should also be worn for operator safety.
- When walking to and from the truck, maintain a safe distance from all machines, even if the operator is visible.

WALK AROUND INSPECTION

At the beginning of each shift, a careful walk around inspection of the truck should be performed before the operator attempts engine start-up. A walk around inspection is a systematic ground level inspection of the truck and its components to ensure that the truck is safe to operate before entering the operator's cab.

Start at the left front corner of the truck (see illustration, next page), and move in a counter-clockwise direction. Move front-to-rear, across the rear, and continuing forward up the opposite side of the truck to the original starting point.

If these steps are performed in sequence, and are repeated from the same point and in the same direction before every shift, many potential problems may be avoided, or scheduled for maintenance. Unscheduled downtime and loss of production can be reduced as a result.

Local work practices may prevent an operator from performing all tasks suggested here. To the extent permitted, the operator should follow this or a similar routine.

⚠ DANGER

High voltage may be present on this truck! DO NOT open any electrical cabinet doors on the truck while the engine is operating! Never climb on any power cables or use power cables for handholds or footholds, unless the engine has been shut off and the system has been verified as at rest!

1. Start at left front of the truck. While performing the walk around inspection, visually inspect all lights and safety equipment for external damage from rocks or misuse. Ensure lenses are clean and unbroken.

   Empty the dust pans on the left side of the air cleaners. Ensure the battery box covers are in place and secure.
2. Move behind the front of the left front tire, inspect the hub and brake assemblies for leaks and any abnormal conditions.
3. Check that all suspension attaching hardware is secure and inspect the mounting key area for evidence of wear. Check that the suspension rod extension is correct, and that there are no leaks. Ensure the suspension protective boot is in good condition.
4. With the engine stopped, check the engine oil level. Use the service light if necessary.
5. Inspect air conditioner belts for correct tension, obvious wear, and tracking. Inspect fan guard security and condition. When leaving this point, be sure to turn off the service light, if used.
6. Inspect the anchor end of the steering cylinder for proper greasing and for secureness.
7. Move outboard of the front wheel. Inspect attaching nuts/studs to be sure all are tight and intact. Inspect the tires for cuts, damage or bubbles. Check tire inflation.

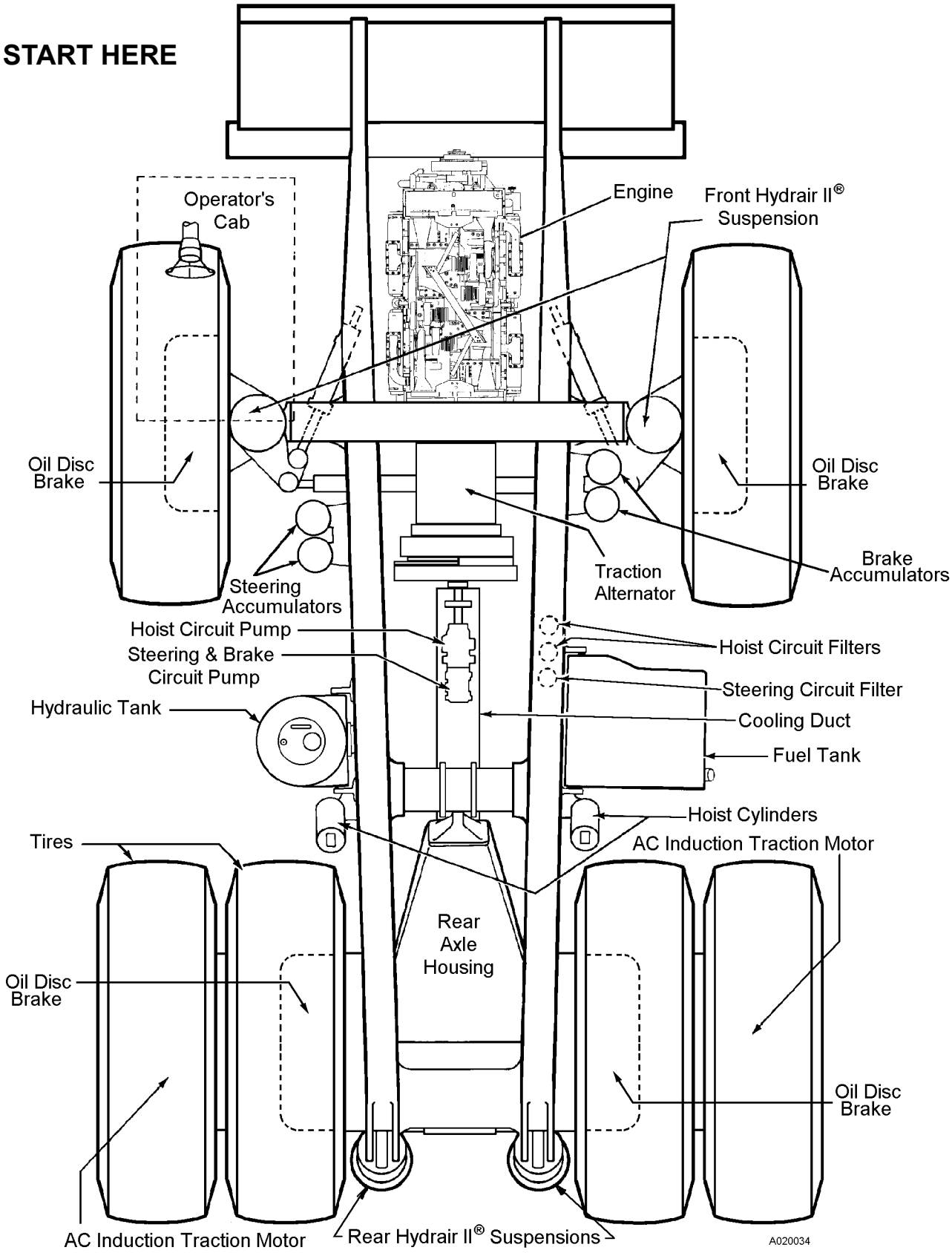

Walk Around Inspection

8. Move behind the front wheel and inspect the steering cylinder. Check for proper greasing and inspect the mounting hardware. Inspect the suspension mounting hardware and rod extension. Ensure the suspension protective boot is in good condition. Inspect the hub and brakes for any unusual conditions. Check the entire area for leaks.
9. Inspect the sight glass on the hydraulic tank. With the engine stopped and body down, hydraulic fluid must be visible in the upper sight glass.
10. Verify all hydraulic tank shut off valves are locked in their fully open positions.
11. Move around the hydraulic tank and in front of the rear dual tires; inspect the hoist cylinder for any damage and leaks. Inspect both upper and lower hoist cylinder pins for secureness and for proper greasing.
12. Before leaving this position, look under the lower edge of the chassis to be sure the flexible duct that carries the air from the blower to the final drive housing is in good condition with no holes or breakage. Also, look up at the main hydraulic pumps to see that there is no leakage or any other unusual condition with the pumps or pump drive shafts.
13. Move around the dual tires, and check to see that all nuts/studs are in place and tight. Inspect the wheel for any oil that would indicate brake leakage or wheel motor leakage.

    Check the dual tires for cuts, damage or bubbles. Verify that inflation appears to be correct. If the truck has operating on a flat tire, the tire must be cool before moving the truck inside. Check for any rocks that might be lodged between the dual tires. Check the rock ejector condition and straightness (so that it can not damage a tire).
14. Inspect the left rear suspension for damage and for correct rod exposure. Check for leaks. Ensure that the covers over the chrome piston rod are in good condition. Inspect for proper greasing.
15. Open the rear hatch cover. Inspect for leaks around the parking brakes. Inspect the condition of cooling air exhaust ductwork to be certain that it is intact and that there are no obstructions.
16. While standing in front of the rear hatch, look up to see that rear lights are in good condition, along with the back-up horns. Look up at panhard rod to see that it is getting proper greasing. Also look at both body hinge pins for greasing and any abnormal condition. Check the hoist limit switch and clear any mud/debris from the contacts.
17. Perform the same inspection on the right rear suspension as done on the left.
18. Move around the right dual tires; inspect between the tires for rocks, and check the condition of the rock ejector. Inspect the tires for cuts or damage, and for correct inflation.
19. Perform the same inspection for wheel nuts/studs and wheel leaks that was done on the left hand dual wheels.
20. Move in front of the right dual tires and inspect the hoist cylinder in the same manner as the left side. Check security and condition of the body-up limit switch. Remove any mud/dirt accumulation from the switch.
21. Move around the fuel tank. Inspect the fuel sight gauge, (this should agree with what will show on the gauge in the cab). Inspect the attaching hardware for the fuel tank at the upper saddles, and then at the lower back of the tank for the secureness and condition of the mounts. Check the hoist filters for leaks.
22. Move behind the right front wheel, and inspect the steering cylinder. Check for proper greasing and inspect the mounting hardware. Check the suspension mounting hardware and suspension extension. Ensure the suspension protective boot is in good condition. Inspect the hub and brakes for any unusual conditions. Check the entire area for leaks.
23. Move around the right front wheel; check that all nuts/studs are in place and tight.
24. Move in behind the front of the right front wheel, check the hub and brakes for leaks and any unusual condition. Inspect the steering cylinder for secureness and for proper greasing. Inspect the engine compartment for any leaks and unusual conditions. Inspect the fan guard and belts. Check for any rags or debris behind the radiator.

25. Inspect the auto lube system. See Automatic Lubrication System in Section P, for specific details concerning the auto lube system.
26. Move around to the right front of the truck, drop the air cleaner pans and empty. Inspect the battery box cover for damage and be sure it is in place and secure.
27. As you move in front of the radiator, inspect for any debris in the radiator and remove. Check for any coolant leaks. Inspect headlights and fog lights.
28. Before climbing the ladder to first level, be sure the ground level engine shutdown switch is ON. Inspect the fire control actuator to be sure the safety pin is in place and the plastic tie that prevents accidental actuation is in place and in good condition. Ensure the battery disconnect switches are ON. Always use grab rails and the ladder when mounting or dismounting the truck. Clean the ladder and hand rails of any foreign material, such as ice, snow, oil or mud.
29. Use the stairs and handrails while climbing from the first level to the cab deck.

⚠WARNING

Always mount and dismount ladders facing the truck. Never attempt to mount or dismount while the truck is in motion.

30. When checking the coolant level in the radiator, use the coolant level sight gauge. If it is necessary to remove the radiator cap, relieve coolant pressure by depressing the pressure relief button, and then slowly removing the radiator cap.

⚠WARNING

If the engine has been running, allow the coolant to cool before removing the fill cap or draining the radiator. Serious burns may result if skin comes in contact with hot coolant.

31. Inspect the covers over the retarding grids and ensure they are secure. Inspect the main air inlet to be sure it is clear. Ensure all cabinet door latches are secure.
32. Move to the back of the cab. Open the doors to the brake cabinet and inspect for leaks.
33. Clean the cab windows and mirrors. Clean out the cab floor as necessary. Ensure steering wheel, controls and pedals are free of any grease or mud.
34. Stow personal gear in the cab in a manner that does not interfere with truck operation. Dirt or trash buildup, specifically in the operator's cab, should be cleaned. DO NOT carry tools or supplies in the cab of the truck or on the decks.
35. Adjust the seat and the steering wheel for use.
36. Read and understand the description of all operator controls in Section N, Operator Cab Controls. Become familiar with all control locations and functions before operating the truck.

ENGINE START-UP SAFETY PRACTICES

⚠DANGER

Never attempt to start the engine by shorting across the cranking motor terminals. This may cause a fire, or serious injury or death to anyone in the machine's path.

Start the engine from the operator's seat, only.

1. Ensure all personnel are clear of the truck before starting the engine. Always sound the horn as a warning before actuating any operational controls. If the truck is in an enclosure, ensure there is adequate ventilation before start-up. Exhaust fumes are dangerous!
2. Be sure the parking brake switch is in the ON position. Check and ensure the selector switch is in NEUTRAL before starting.

   Move the rest switch to the ON position to put the drive system in rest mode of operation. Refer to discussion of the rest switch in Section 32, Operator Cab Controls.
3. If the truck is equipped with auxiliary cold weather heater system(s), DO NOT attempt to start the engine while the heaters are in operation. Damage to coolant heaters will result!

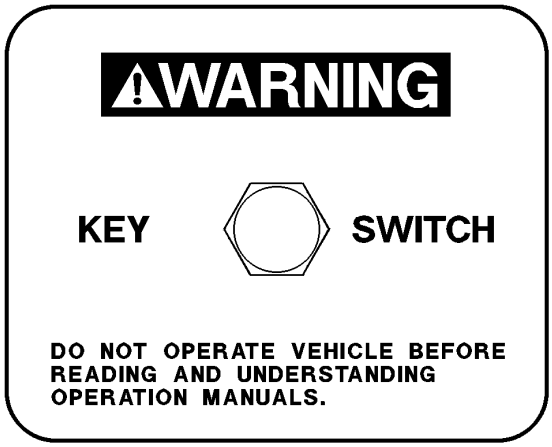

WA4368A

4. The key switch is a three position (OFF, RUN, START) switch. When the switch is rotated one position clockwise, it is in the RUN position and all electrical circuits (except START) are activated.
   a. Turn key switch to the RUN (not START) position.
   b. With the selector switch in NEUTRAL, rotate the key switch fully clockwise to the START position, and hold this position until the engine starts (see *NOTE* below). The START position is spring-loaded and will return to RUN when the key is released.
   c. After the engine has started, place the rest switch in the OFF position to enable the drive system. Refer to the discussion on the rest switch, in 32, Operator Cab Controls.

⚠CAUTION

DO NOT crank electric cranking motors for more than 30 seconds. Allow two minutes for cooling before attempting to start the engine again. Severe damage to the cranking motors may result from overheating.

NOTE: This truck is equipped with an engine prelube system. With this feature, a noticeable time delay may occur (while engine lube oil passages are being filled and pressurized) before engine cranking will begin.

AFTER STARTING THE ENGINE

1. Become thoroughly familiar with steering and emergency controls. After the engine has been started and low pressure and warning systems are normal, test the truck steering in extreme right and left directions. If the steering system is not operating properly, shut the engine off, immediately. Determine the steering system problem and have repaired before resuming operation.
2. Operate each of the truck's brake circuits at least twice prior to operating and moving the truck. These circuits include individual activation from the operator's cab of the service brake, parking brake, and brake lock. With the engine running and with the hydraulic circuit fully charged, activate each circuit, individually. If any application or release of any brake circuit appears sluggish or improper, or if warning alarms are activated on application or release, shut the engine off and notify maintenance personnel. DO NOT operate the truck until the brake circuit in question is fully operational.
3. Check the gauges, warning lights and instruments before moving the truck to ensure proper system operation and proper instrument functioning. Pay special attention to braking and steering circuit hydraulic warning lights. If warning lights come on, shut off the engine immediately and determine the cause.
4. Ensure the headlights, work lights and taillights are in proper working order. Good visibility may prevent an accident. Check operation of the windshield wipers

Additional Guidelines

1. When the truck body is raised, DO NOT allow anyone beneath it unless the body-up retaining cable is in place.
2. DO NOT use the fire extinguisher for any purpose other than putting out a fire! If an extinguisher is discharged, report the occurrence so the used unit can be refilled or replaced.
3. DO NOT allow unauthorized personnel to ride in the truck. DO NOT allow anyone to ride on the ladder or outside of the truck cab. Passengers must be belted into the passenger seat during travel.
4. DO NOT leave the truck unattended while the engine is running. Shut the engine off and apply the parking brake before getting out of the cab.

MACHINE OPERATION SAFETY PRECAUTIONS

After the truck engine is started and all systems are functioning properly, the operator must follow all local safety rules to ensure safe machine operation.

⚠WARNING

If any of the red warning lights come on or if any gauge reads in the red area during truck operation, a malfunction is indicated. Stop the truck as soon as safety permits, and shut down the engine. Have the problem corrected before resuming truck operation.

⚠WARNING

The truck is equipped with "slip/slide" control. If this function should become inoperative, operating the truck with stalled or free spinning wheel motors may cause serious damage to wheel motors! If the truck does not begin to move within 10 seconds after depressing throttle pedal (selector switch in a drive position), release throttle pedal and allow wheels to regain traction before accelerating again.

1. Always look to the rear before reversing the truck. Watch for, and obey ground spotter's hand signals before traveling in reverse. Sound the horn (3 blasts). The spotter should have a clear view of the total area at the rear of the truck.
2. Operate the truck only while properly seated with seat belt fastened. Keep hands and feet inside the cab compartment while the truck is in operation.
3. Check gauges and instruments frequently during operation for proper readings.
4. Observe all regulations pertaining to the job site's traffic patterns. Be alert to any unusual traffic patterns. Obey the spotter's signals.
5. Match the truck speed to haul road conditions and slow the truck in congested areas. Keep a firm grip on the steering wheel at all times.
6. DO NOT allow the engine to run at idle for extended periods of time.

7. Check the parking brake periodically during each shift. Use the parking brake for parking, only. DO NOT use the parking brake for loading or dumping. DO NOT attempt to apply the parking brake while the truck is moving!

WARNING

DO NOT use the brake lock for parking. When the engine is turned off, hydraulic pressure will bleed down, allowing the brakes to release!

8. Check the brake lock performance periodically to ensure safe loading and dumping.
9. Proceed slowly on rough terrain to avoid deep ruts or large obstacles. Avoid traveling close to soft edges and near the edges of a fill area.
10. Truck operation requires concentrated effort by the driver. Avoid distractions of any kind while operating the truck.

MACHINE OPERATION ON THE HAUL ROAD

1. Always stay alert! If unfamiliar with the haul road, drive with extreme caution. Cab doors must remain closed at all times if the truck is in motion or unattended.
2. Obey all road signs. Keep the truck under control at all times. Govern truck speed by the road conditions, weather and visibility. Report haul road conditions, immediately. Muddy or icy roads, pot holes or other obstructions can present hazards.
3. Initial propulsion with a loaded truck should begin from a level surface whenever possible. At times, starting on a hill or grade cannot be avoided. Refer to Starting On A Grade With A Loaded Truck later in this chapter.
4. When reversing the truck, give a back-up signal (three blasts on the horn); when starting forward, signal with two blasts on the horn. These signals must be given each time the truck is moved forward or backward.
5. Use extreme caution when approaching a haul road intersection. Maintain a safe distance from oncoming vehicles.
6. Maintain a safe distance when following another vehicle. Never approach another vehicle from the rear, in the same lane, closer than 50 ft. (15 m). When driving on a down grade, this distance should not be less than 100 ft. (30 m).
7. DO NOT stop or park on a haul road unless unavoidable. If the truck must be stopped on a haul road, park in a safe place, apply the parking brake, and shut the engine off before leaving the cab. Block the wheels securely and notify maintenance personnel for assistance.
8. While driving on a slope, maintain a speed that will ensure safe driving and provide effective retarding under all conditions (Refer to Dynamic Retarding, in 32 Operator Cab Controls. The grade/speed retard chart in the operator's cab should always be referenced to determine maximum safe truck speeds for descending various grades with a loaded truck.
9. When operating the truck in darkness, or when visibility is poor, DO NOT move the truck unless all headlights, clearance lights, and tail lights are on. DO NOT back the truck if the back-up horn or lights are inoperative. Always dim the headlights when approaching oncoming vehicles.
10. If the emergency steering light and/or low brake pressure warning light illuminate during operation, immediately steer the truck to a safe stopping area, away from other traffic if possible. Refer to item 7 above.
11. Check the tires for proper inflation during each shift. If the truck has been operating on a flat or under-inflated tire, the truck must remain outside of any buildings until the tire cools.

STARTING ON A GRADE WITH A LOADED TRUCK

Initial propulsion with a loaded truck should begin from a level surface whenever possible. There are circumstances when starting on a hill or grade cannot be avoided. In these instances use the following procedure:

1. Fully depress the service brake pedal (DO NOT use retarder lever) to hold the truck on the grade. With service brakes fully applied, move the selector switch to a drive position (FORWARD/REVERSE) and increase engine rpm with the throttle pedal.
2. As engine rpm approaches maximum, and when propulsion effort is felt working against the brakes, release the brakes and allow truck movement. Be sure to completely release the service brake pedal. As truck speed increases above 3-5 mph (5-8 kph) the PSC will drop propulsion if the retarder is still applied.

   Releasing and reapplying dynamic retarding during a hill start operation will result in loss of propulsion.

PASSING

1. DO NOT pass another truck on a hill or on a blind curve!
2. Before passing, ensure the road ahead is clear. If a disabled truck is blocking your lane, slow down and pass with extreme caution.
3. Use only the areas designated for passing.

LOADING

1. Approach the loading area with caution. Remain at a safe distance while the truck ahead is being loaded.
2. DO NOT drive over unprotected power cables.
3. When approaching or leaving a loading area, watch out for other vehicles and for personnel working in the area.
4. When pulling in under a loader or shovel, follow the spotter's or the shovel operator's signals. The truck operator may speed up loading by observing the location and loading cycle of the truck being loaded ahead, and then following a similar pattern.
5. During loading, the operator must stay in the truck cab with the engine running. Place the selector switch in NEUTRAL and apply the brake lock.
6. When loaded, pull away from the shovel as quickly as possible with extreme caution.

DUMPING

Raising The Dump Body

1. Approach the dump area with extreme caution. Ensure the area is clear of persons and obstructions, including overhead utility lines. Obey signals as directed by the spotter, if present.

   Avoid unstable areas. Keep a safe distance from the edge of the dump area. Position the truck on a solid, level surface before dumping.

⚠ DANGER

As the body raises, the truck center of gravity will move. The truck must be on level surface to prevent tipping/rolling!

2. Carefully maneuver the truck into the dump position. When backing the truck into the dump position, use only the brake pedal to stop and hold the truck; DO NOT rely on the brake lock to stop the truck; this control is not modulated and applies the rear service brakes only.

3. When the truck is stopped and in dump position, apply the brake lock and move the selector switch to the NEUTRAL position.

⚠WARNING

The dumping of very large rocks (10% of payload, or greater) or sticky material (loads that do not flow freely from the body) may allow the material to move too fast and cause the body to move rapidly and suddenly. This sudden movement may jolt the truck violently and cause possible injury to the operator, and/or damage to the hoist cylinders, frame, and/or body hinge pins. If it is necessary to dump this kind of material, slowly accelerate engine rpm while raising the body. When the material starts to move, release the hoist lever to the HOLD position. If the material does not continue moving and clear the body, repeat this procedure until the material has been dumped.

4. Pull the lever to the rear to actuate the hoist circuit. (Releasing the lever anywhere during the raise cycle will hold the body at that position.)

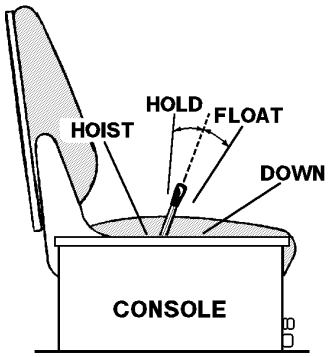

5. Raise engine rpm to accelerate hoist speed.
6. Reduce the engine rpm as the last stage of the hoist cylinder begins to extend. Keep engine speed at low idle as the last stage reaches half-extension.
7. Release the hoist lever as the last stage of the hoist cylinder reaches full extension.
8. After the material being dumped clears the body, lower the body to the frame.

Lowering The Dump Body

(When dumping on flat ground):

It is very likely when dumping on flat ground that the dumped material will build up enough to prevent the body from lowering. In this case, the truck will have to be driven forward a short distance (just enough to clear the material) before the body can be lowered.

1. Shift selector switch to FORWARD, release brake lock, depress Override button and drive just far enough forward for body to clear material. Stop, shift selector switch to NEUTRAL apply brake lock.
2. Move the hoist lever forward to the DOWN position and release. Releasing the lever places the hoist control valve in the FLOAT position allowing the body to return to the frame.

NOTE: If dumped material builds up at the rear of the body and the body cannot be lowered, then perform Steps "a" and "b" below:

a. Move the hoist lever back to the RAISE position to fully raise the dump body. Then, release the hoist lever so it returns to the HOLD position.

b. Move the shift selector switch to FORWARD, release the brake lock, depress the override button and drive forward to clear the material. Stop, shift the selector switch to NEUTRAL, apply the brake lock and lower the body, again.

NOTE: When an attempt to lower the body is unsuccessful because of material obstruction, raise the body back up. This will help to prevent the body from suddenly dropping when pulling away from the obstruction.

⚠WARNING

CAUTION! The truck is not to be moved with the dump body raised except for emergency purposes only. Failure to lower the body before moving the truck may cause damage to the hoist cylinders, frame and/or body hinge pins.

3. With the body returned to the frame, move the selector switch to FORWARD, release the brake lock, and carefully leave the dump area.

Lowering The Dump Body

(When dumping over a berm or into a crusher):

1. Move the hoist lever to the DOWN position and release. Releasing the lever places the hoist control valve in the FLOAT position allowing the body to return to the frame.

NOTE: If dumped material builds up at the rear of the body and the body cannot be lowered, perform Steps "a" & "b" below:

   a. Move the hoist lever back to the HOIST position to fully raise the dump body. Release the hoist lever to return it to the HOLD position.

NOTE: DO NOT drive forward if the tail of the body will not clear the crusher wall in the fully raised position.

   b. Move the selector switch to FORWARD, release the brake lock, depress the override button, and drive forward to clear the material. Stop, shift the selector switch to NEUTRAL, apply the brake lock and lower the body again.

NOTE: When an attempt to lower the body is unsuccessful because of material obstruction, raise the body back up. This will help to prevent the body from suddenly dropping when pulling away from the obstruction.

⚠WARNING

CAUTION! DO NOT move the truck with the dump body raised except for emergency purposes only. Failure to lower the body before moving the truck may cause damage to the hoist cylinders, frame and/or body hinge pins.

2. With the body returned to the frame, move the selector switch to FORWARD, release the brake lock, and carefully leave the dump area.

TOWING

Prior to towing a truck, many factors must be carefully considered. Serious personal injury and/or significant property damage may result if important safety practices, procedures and preparation for moving heavy equipment are not observed. DO NOT tow the truck any faster than 5 mph (8 kph).

Attachments for towing the 930E are available from Komatsu distributors as follows:

Front Bumper Modification Kit - MK3941: This kit contains the parts necessary to modify the front bumper for installation of towing bosses. One MK3941 kit is required for each truck in the fleet.

Tow Adaptor Structure - MK3945: This structure must be ordered (or designed) to mate with the intended towing vehicle and is intended for towing an unloaded vehicle only.

A disabled machine may be towed after the following minimum precautions have been taken.

1. Shut the engine off.
2. If equipped, install hydraulic connections for steering and dumping between the tow vehicle the and disabled vehicle. Check the disabled vehicle braking system.
3. If the truck is loaded, dump the entire load. Never pull or tow a loaded truck.
4. Inspect the tow bar for adequacy (approximately 1.5 times the gross vehicle weight of the truck being towed).
5. Ensure the towing vehicle has adequate capacity to both move and stop the disabled truck under all conditions.
6. Block the disabled truck to prevent movement while attaching tow bar.
7. Release the disabled truck brakes and remove the blocking.
8. Sudden movement may cause tow bar failure. Smooth, gradual truck movement is preferred.
9. Minimize tow angle at all times - never exceed 30°. The disabled truck must be steered in the direction of the tow bar.

SAFE PARKING PROCEDURES

The operator must continue to use safety precautions when preparing for parking and engine shutdown.

In the event that the equipment is being used in consecutive shifts, any questionable truck performance the operator may have noticed must be checked by maintenance personnel before the truck is released to another operator.

1. Park the truck on level ground, if possible. If it is necessary to park on a grade, the truck should be positioned at right angles to the grade.
2. The parking brake must be applied and/or chocks placed fore/aft of the wheels so that the truck cannot roll. Each truck should be parked at a reasonable distance from another.
3. Haul roads are not safe parking areas. In an emergency, pick the safest spot most visible to other machines in the area. If the truck becomes disabled where traffic is heavy, mark the truck with warning flags in daylight, or flares at night.

NORMAL ENGINE SHUTDOWN PROCEDURE

The following procedure should be followed at each engine shutdown.

1. Stop the truck out of the way of other traffic. Park on a level surface, free of overhead power lines or other objects that could prevent raising the dump body.
   a. Reduce engine speed to idle.
   b. Place the selector switch in NEUTRAL.
   c. Apply the parking brake. Be sure the parking brake applied indicator light in the overhead display panel is illuminated.
   d. Allow the engine to cool gradually by operating at low idle for 3 to 5 minutes, or if preferred, activate the 5 minute shutdown delay timer as described on the following page.
2. Place the rest switch in the ON position to put the A-C drive system in rest mode. Be sure the rest indicator light in the overhead panel is illuminated.
3. With the engine cooled down, turn the key switch counterclockwise to the OFF position for normal shutdown of the engine.

   If the engine does not shut off with the key switch, use the engine shutdown switch on the center console. Pull the switch up to stop the engine.
4. With the key switch OFF and engine stopped, wait at least 90 seconds. Ensure the steering circuit is completely bled down by turning the steering wheel back and forth several times. No front wheel movement will occur when hydraulic pressure is relieved. If the vehicle continues to steer after shutdown, notify maintenance personnel.
5. Verify all link voltage lights are off (one on the back interior wall of the operator cab, two on the electrical cabinet), and notify maintenance personnel if the lights remain illuminated longer than five minutes after the engine is shut down.
6. Close and lock all windows, remove the key from the key switch and lock the cab to prevent possible unauthorized truck operation. Properly dismount the truck. Put wheel chocks in place.

DELAYED ENGINE SHUTDOWN PROCEDURE

1. Stop the truck out of the way of other traffic. Park on a level surface, free of overhead power lines or other objects that could prevent raising the dump body.
   a. Reduce engine speed to low idle.
   b. Place the selector switch in NEUTRAL.
   c. Apply the parking brake. Ensure the parking brake applied indicator light in the overhead display panel is illuminated.
2. Place the rest switch in the ON position to put the A-C drive system in the rest mode. Be sure the rest indicator light in the overhead panel is illuminated.
3. Refer to Instrument Panel and Indicator Lights in Section 32 for location of the engine shutdown switch with 5 minute idle timer delay. This is a 3-position rocker-type switch (OFF-ON-MOMENTARY).

4. Press the top of the engine shutdown switch to select the ON (center) position. Press the top of the switch again to activate the timer delay (MOMENTARY position). Release the switch and allow it to return to the ON position.

When the engine shutdown timer has been activated, the timer delay indicator light in the overhead status panel will illuminate to indicate that the shutdown timing sequence has started. The engine will continue to idle for approximately 5 minutes to allow for proper engine cool-down before stopping.

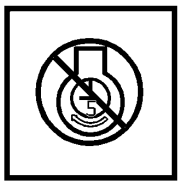

5. Turn the key switch counterclockwise to the OFF position to cause the engine to shutdown when the timing sequence is complete. When the engine stops, the hydraulic bleed-down timer will activate and the 24 VDC electric circuits will turn off.

NOTE: To cancel the 5 minute idle timer sequence, press the timer delay shutdown switch to the OFF (lower) position. If the key switch is in the OFF position, the engine will stop. If the key switch is in the ON position, the engine will continue to run.

SUDDEN LOSS OF ENGINE POWER

If the engine suddenly stops, there is enough hydraulic pressure stored in the brake and steering accumulators to allow the operation of the steering and brake functions. However, this oil supply is limited so it is important to stop the truck as quickly and safely as possible after the loss of engine power.

If the brake supply pressure drops to a pre-determined level, the low brake pressure warning light will illuminate and a buzzer will sound. If the brake pressure continues to decrease, the auto-apply feature will activate and the service brakes will apply automatically to stop the truck.

1. Bring the truck to a safe stop as quickly as possible by using the foot pedal to apply the service brakes. If possible, safely steer the truck to the side of the road while braking.

⚠WARNING

Dynamic retarding will not be available! DO NOT use the service brakes for continuous retarding purposes.

2. Apply the parking brake as soon as the truck has stopped moving.
3. Turn the key switch OFF and notify maintenance personnel, immediately.
4. If traffic is heavy near the disabled machine, mark the truck with warning flags during daylight hours or use flares at night. Adhere to local regulations.

DISABLED TRUCK DUMPING PROCEDURE

Sometimes it is necessary to dump a load from the body of a truck when the hoist system is inoperable. The following instructions describe the use of a "good" truck to provide the hydraulic power required to raise the body of the "disabled" truck to dump the load.

In the example below, Figure 30-1 illustrates a typical hookup from the good truck. The disabled truck may be another Model 930E or a different Komatsu model.

Hookup

Make sure there is an adequate, clear area to dump the loaded box. When the good truck is in position, shut down the engine and allow the hydraulic system to bleed down. Be certain pressure has bled off before connecting hoses.

1. With the good truck parked as close as possible to the disabled truck, attach a hose from the power up quick disconnect (4, Figure 30-1) to the power down circuit of the disabled truck. The hose must be rated to withstand 2500 psi (17 MPa) or greater pressure.

The power down circuit will use a smaller diameter hose (tube) than the power up circuit.

2. Connect another hose from the power down quick disconnect (3) to the power up circuit of the disabled truck.

NOTE: If both trucks are a model 930E, the hoses will be installed at the quick disconnects shown in Figure 30-1 *and will be crossed when connected.*

Raising the Body

3. On the disabled truck, move the hoist control lever to power up and then release it to place the hoist pilot valve in the HOLD position (leave in this position during entire procedure).
4. Start the engine on the good truck, place the hoist control in the power down position and increase engine rpm to high idle to dump the disabled truck. If the body of the disabled truck fails to raise, increase the good truck power down relief pressure as follows:
   a. Shut down engine and allow the hydraulic system to bleed down.
   b. Remove the cap from the hoist pilot valve relief valve (2, Figure 30-1) located in the hydraulics components cabinet behind the cab. While counting the number of turns, slowly screw the relief valve adjustment screw clockwise until it bottoms.
5. Repeat Step 4 to dump the disabled truck.

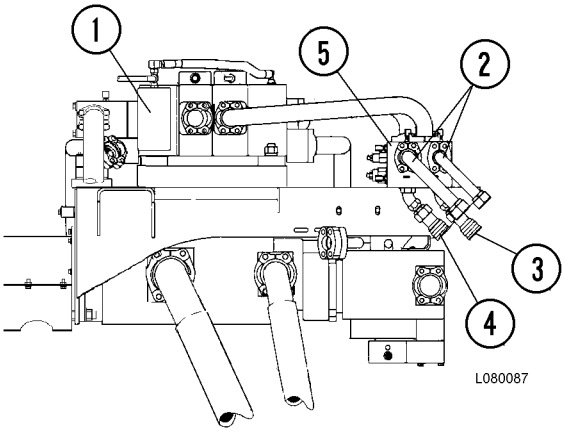

FIGURE 30-1. PUMP MODULE, HOSE HOOKUP

1. Hoist Valve
2. Tubes to LH Hoist Cylinder
3. Power Down Quick Disconnect (Connect to power up circuit of disabled truck.)
4. Power Up Quick Disconnect (Connect to power down circuit of disabled truck.)
5. Overcenter Manifold

Lowering the Body

6. Place the hoist lever of the good truck in FLOAT to lower the body. If necessary, momentarily place the hoist control in POWER UP until the body is able to descend in FLOAT. Do not accelerate the engine.
7. After body is lowered, shut down the truck, bleed the hydraulic system and disconnect the hoses.
8. Reduce power down relief valve pressure to normal on good truck by turning the adjustment counterclockwise the same number of turns as required in Step 4 b.
9. Check power down relief pressure per instructions in the service manual, Section L, Hydraulic Check-Out Procedure.
10. Check the hydraulic tank oil level.

RESERVE ENGINE OIL SYSTEM (Optional)

The reserve oil tank for the engine is designed to add more oil capacity to the engine and to make less frequent servicing of the engine oil. The circulation of oil between the engine sump and reserve tank increases the total volume of working oil. This dilutes the effects of contamination and loss of additives and maintains the oil quality over longer periods. A filter in the supply circuit protects the pumping unit and prevents transfer of contaminants to the engine sump which might enter the tank during servicing. It also gives an added level of oil cleanup.

Operation

Engine oil is circulated between the engine sump and the reserve tank by two electrically driven pumps within a single pumping unit (11, Figure 30-2). The pump unit is mounted on the side of the reserve tank, and is equipped with an LED monitor light on one side.

Pump 1 (in the pump unit) draws oil from the engine sump at a preset control point (determined by the height of the suction tube). Oil above this point is withdrawn and transferred to reserve tank (9). This lowers the level in the engine sump until air is drawn.

Air reaching the pumping unit activates pump 2 (in the pump unit) which returns oil from the reserve tank and raises the engine sump level until air is no longer drawn by pump 1. Pump 2 then turns off. The running level is continuously adjusted at the control point by alternation between withdrawal and return of oil at the sump.

LED Monitor Light

- Steady - Pump 1 is withdrawing oil from the engine sump and bringing down the oil level.
- Regular Pulsing - Pump 2 is returning oil to the engine sump and raising the oil level.
- Irregular Pulsing - Oil is on the correct running level.

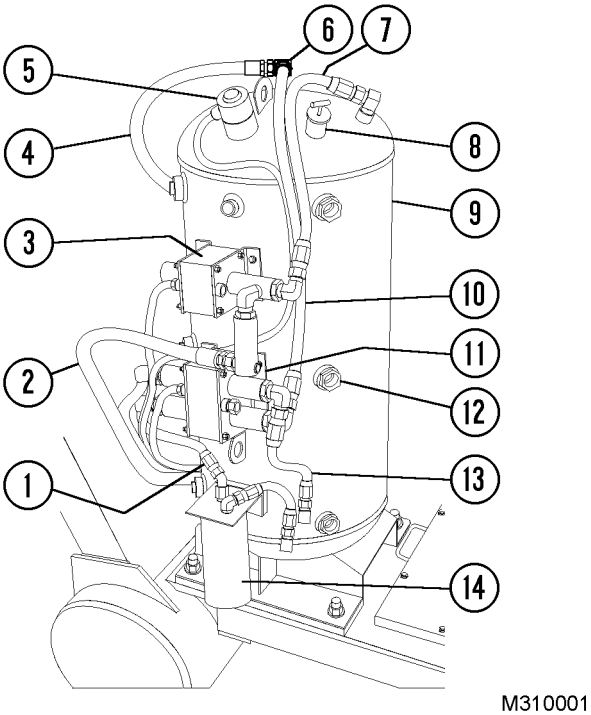

FIGURE 30-2. RESERVE ENGINE OIL SYSTEM

1. Oil Suction
2. Oil Tank Fill
3. Fill Valve
4. Engine Fill Line
5. Oil Level Sensor
6. Air Valve
7. Tank Fill Line
8. Fill Cap
9. Reserve Oil Tank
10. Engine Fill Line
11. Pump Unit
12. Sight Gauge
13. Tank Return Line
14. Oil Filter

Changing Oil

1. Drain both the engine sump and the reserve tank. Refill both engine and reserve tank with new oil to proper levels.
2. Change engine and reserve tank filters as required.
3. Start engine and check for proper operation.

NOTE: Do not use the oil in the reserve tank to fill the engine sump. Both must be at proper level before starting engine.

4. The engine oil level should be checked with the engine dipstick at every shift change. If the oil level in the engine is incorrect, check for proper operation of the reserve engine oil system.

   The oil level in the reserve tank must also be checked at every shift change. Oil must be visible in middle sight gauge (12). If not, add oil to the reserve tank by using the quick fill system utilizing tank fill valve (3). For filling instructions, refer to Section 40, Lubrication and Service.

OPERATOR CAB AND CONTROLS

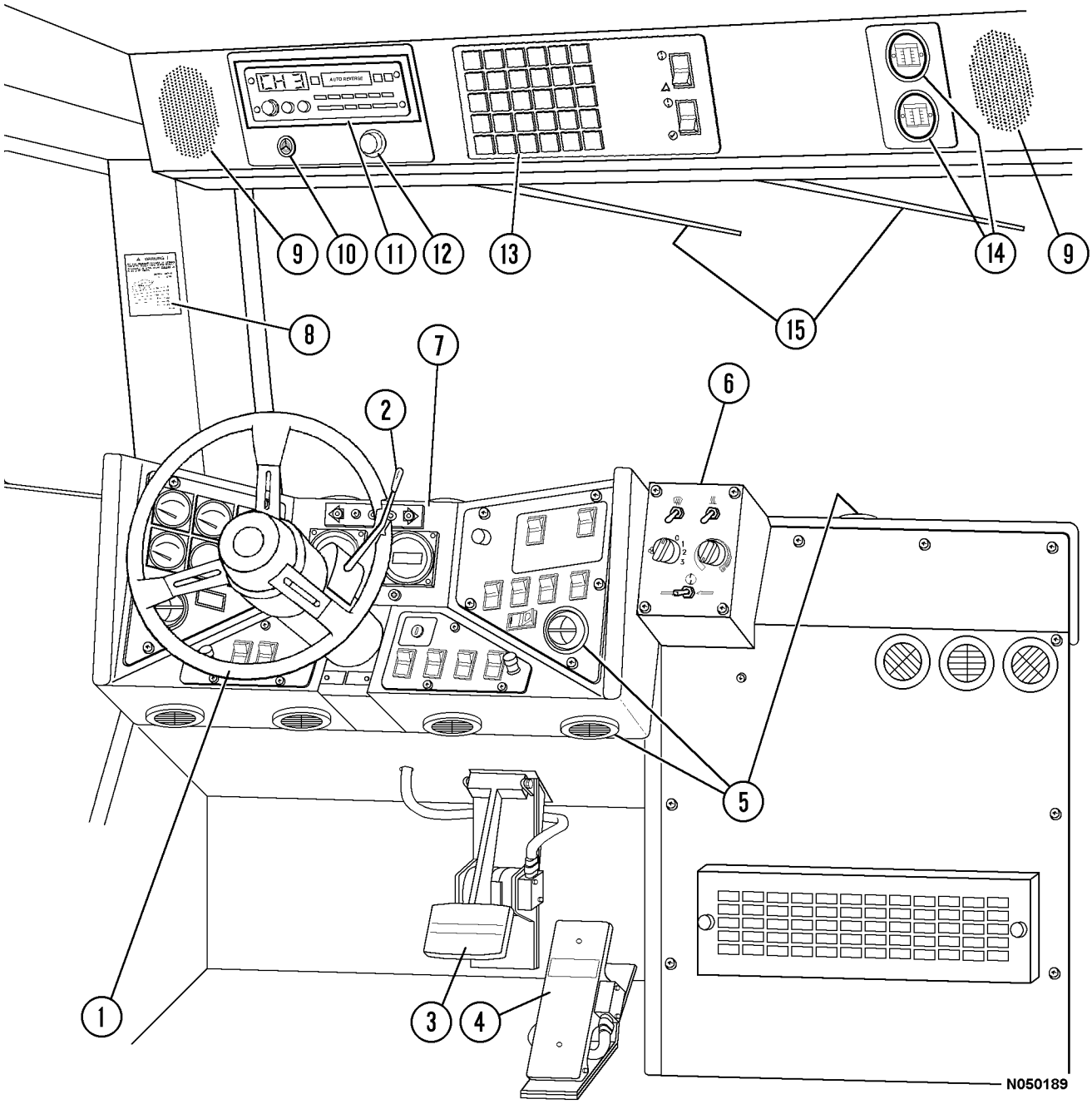

FIGURE 32-1. CAB INTERIOR - OPERATOR VIEW

1. Steering Wheel
2. Retarder Control Lever
3. Retarder/Service Brake Pedal
4. Throttle/Accelerator Pedal
5. Heater/Air Conditioner Vents
6. Heater/Air Conditioner Controls
7. Instrument Panel
8. Grade/Speed Retard Chart
9. Radio Speakers
10. Warning Alarm Buzzer
11. Radio, AM/FM Stereo Cassette
12. Warning Lights Dimmer Control
13. Warning/Status Indicator Lights
14. Air Cleaner Vacuum Gauges
15. Windshield Wipers

STEERING WHEEL AND CONTROLS

Steering wheel (1, Figure 32-2) can be telescoped "in" and "out" and the lilt angle can be adjusted to provide a comfortable steering wheel position for most operators.

Horn Button

Actuate horn (2, Figure 32-2) by pushing the button in the center of the steering wheel. Ensure that the horn operates before moving the truck. Observe all local safety rules regarding the use of the horn as a warning signal device before starting the engine and moving the vehicle.

Tilt / Telescope Lever

The steering column can be telescoped or the wheel tilted with the lever (3, Figure 32-2) in front of the turn signal lever.

Adjust the tilt of the steering wheel by pulling the lever toward the steering wheel and moving the wheel to the desired angle. Releasing the lever will lock the wheel in the desired location.

Adjust the telescope function by pushing the lever forward to unlock. After positioning as desired, release the lever to lock position.

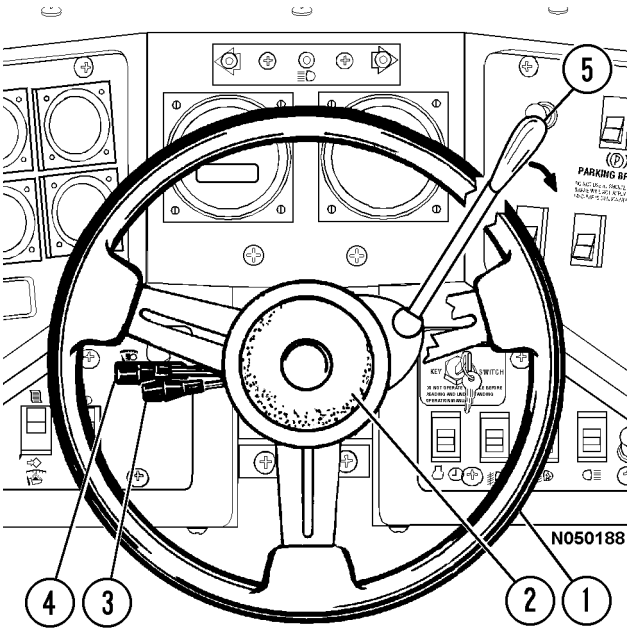

FIGURE 32-2. STEERING WHEEL & CONTROLS

1. Steering Wheel
2. Horn Button
3. Tilt/Telescope Lever
4. Multi-Function Turn Signal Switch
5. Retarder Control Lever

Multi-Function Turn Signal Switch

Multi-function turn signal switch (4, Figure 32-2) is used to activate the turn signal lights, the windshield wipers, and to select either high or low beam headlights.

Turn Signal Operation

Move the lever upward to signal a right turn.

An indicator in the top, center of the instrument panel will illuminate to indicate turn direction selected. Refer to Instrument Panel and Indicator Lights in this section.

Move the lever downward to signal a left turn.

NOTE: *The turn signal does not automatically cancel after the turn has been completed. The turn signal lever must be manually returned to the neutral position.*

High Beam Headlight Operation

Pulling the lever inward (toward the rear of the cab) changes the headlights to high beam. When the high beams are selected, the indicator in the top center of the instrument panel will illuminate. Moving the switch back to the original position will return the headlights to low beam.

Windshield Wiper Operation

Windshield Wipers OFF

Intermittent - Long Delay

Intermittent -Medium Delay

Intermittent -Short Delay

Low Speed

High Speed

Depressing the button at the end of the lever will activate the windshield washer.

DYNAMIC RETARDING

Dynamic retarding is a braking torque (not a brake) produced through electrical generation by the wheel-motors when the truck motion (momentum) is the propelling force.

For normal truck operation, **dynamic retarding should be used to slow and control truck speed**.

Dynamic retarding is available in FORWARD/REVERSE at all truck speeds above 0 mph/kph; however, as the truck speed slows below 3 mph (4.8 kph), the available retarding force may not be effective. **Use the service brakes to bring the truck to a complete stop.**

Dynamic retarding will not hold a stationary truck on an incline.Use the parking brake or wheel brake lock for this purpose.

Dynamic retarding is available in NEUTRAL only when truck speed is above 3 mph (4.8 kph).

When dynamic retarding is in operation, engine rpm will automatically go to an advance retard speed setting. This rpm will vary depending on temperature of several electrical system components.

Dynamic retarding will be applied automatically if the speed of the truck obtains the maximum speed setting programmed in the control system software.

When dynamic retarding is activated, an indicator light in the overhead display will illuminate. The grade/speed retard chart should always be used to determine safe downhill speeds. Refer to Grade/Speed Retard Chart in this chapter.

Retarder Control Lever

Retarder control lever (5, Figure 32-2) mounted on the right side of the steering column can be used to modulate retarding effort. The lever will command the full range of retarding and will remain at a fixed position when released.

a. When the lever is rotated to full “up” (counterclockwise) position, it is in the OFF/no retard position. An adjustable detent holds the lever in the OFF position. Refer to Section J in the service manual for adjustment procedures.

b. When the lever is rotated to full "down" (clockwise) position, it is in the full ON/retard position.

c. For long downhill hauls, the lever may be positioned to provide desired retarding effort, and it will remain where it is positioned.

NOTE: *The retarder control lever must be rotated back to the OFF position before the truck will resume the propel mode of operation.*

The lever and foot-operated retarder/service brake pedal can be used simultaneously or independently. The Propulsion System Controller (PSC) will determine which device is requesting the most retarding effort and apply that amount.

Dynamic Retarder/Service Brake Pedal

Dynamic retarder/service brake pedal (3, Figure 32-1) is a single, foot-operated pedal that controls both retarding and service brake functions. The first portion of pedal travel commands retarding effort through a rotary potentiometer. The second portion of pedal travel modulates service brake pressure directly through a hydraulic valve. Thus, the operator must first apply, and maintain, full dynamic retarding in order to apply the service brakes. Releasing the pedal returns brake and retarder to the OFF position.

When the pedal is partially depressed, the dynamic retarding is actuated. As the pedal is further depressed, to where dynamic retarding is fully applied; the service brakes (while maintaining full retarding) are actuated through a hydraulic valve which modulates pressure to the service brakes. **Completely depressing the pedal causes full application of both dynamic retarding and the service brakes.** An indicator light in the overhead panel (B3, Figure 32-8) will illuminate, and an increase in pedal resistance will be felt when the service brakes are applied.

For normal truck operation, **dynamic retarding** (lever or foot-operated pedal) should be used to slow and control the speed of the truck.

Service brakes should be applied only when dynamic retarding requires additional braking force to slow the truck speed quickly or when bringing the truck to a complete stop.

Throttle/Accelerator Pedal

Throttle/accelerator pedal (4, Figure 32-1 and shown below) is a foot-operated pedal which allows the operator to control engine rpm depending on pedal depression.

It is used by the operator to request torque from the motors when in forward or reverse. In this mode, the propulsion system controller commands the correct engine speed for the power required. In NEUTRAL, this pedal controls engine speed directly.

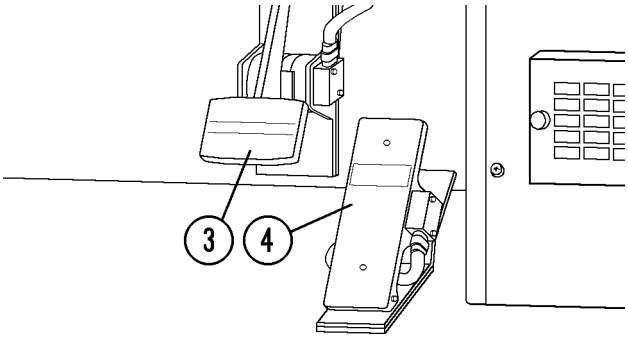

Starting on a Grade With a Loaded Truck

Initial propulsion with a loaded truck should begin from a level surface whenever possible, but when there are circumstances where starting on a hill or grade cannot be avoided, use the following procedure:

1. Fully depress the foot-operated retarder/service brake pedal (Do Not use retarder lever) to hold the truck on the grade. With service brakes fully applied, move the selector switch to a drive position (FORWARD/REVERSE) and increase engine rpm with throttle pedal.
2. As engine rpm approaches maximum, and operator senses propulsion effort working against the brakes, release the brakes and let truck movement start. Be sure to completely release the foot-operated retarder/service brake pedal. As truck speed increases above 3-5 mph (5-8 kph), the Propulsion System Control (PSC) will drop propulsion if the retarder is still applied.

   Releasing and reapplying dynamic retarding during a hill start operation will result in loss of propulsion and, if truck speed is above 1-2 mph, application of retarding effort.

GRADE/SPEED RETARD CHART

Grade/speed retard chart (8, Figure 32-1 and shown below) provides the recommended MAXIMUM retarding limits at various truck speeds and grades with a fully loaded truck.

This decal in the truck may differ from the decal below due to optional truck equipment such as: wheel motor drive train ratios, retarder grids, tire sizes, etc. Always refer to this decal in the operator's cab and follow these recommendations for truck operation.

The operator should reference this chart before descending any grade with a loaded truck. Proper use of dynamic retarding will maintain a safe speed.

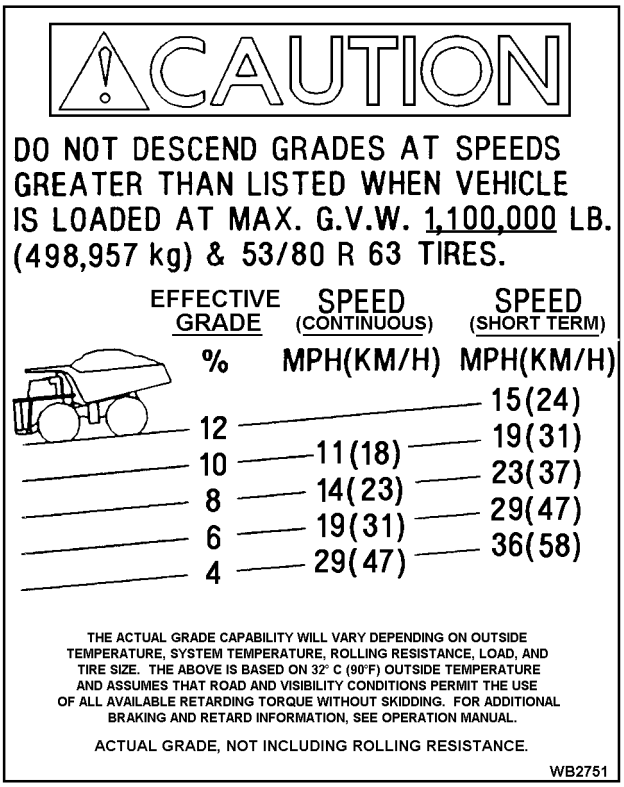

Two speed lists are provided, one for *continuous* retarding, and the second for *short term* (approximately three-minute) retarding. Both lists are matched to the truck at maximum Gross Vehicle Weight (GVW). The two ratings are guidelines for proper usage of the retard function on downhill grades.

The "short term" numbers listed on the chart indicate the combination of speeds and grades which the vehicle can safely negotiate for a short duration before system components reach the maximum allowable temperature during retarding. These speeds are faster than the "continuous" values, reflecting the thermal capacity of various system components. System components can accept heating at a higher-than-continuous rate for a short period of time. Beyond this short duration of time, the system would become overheated.

If the vehicle is operated at "short term" grade and speed limits for a period of time exceeding thermal capacity, the Propulsion System Controller (PSC) gradually reduces retarding effort from "short term" to "continuous". The "retard @ continuous" indicator light will illuminate alerting the operator of the retarding reduction and the need for a reduction in speed. The operator must use the service brakes to **quickly** slow the truck to maximum "continuous" retarding limits or less.

⚠CAUTION

Do not LIGHTLY apply the service brakes when attempting to slow the truck on a downhill grade. Overheating of the brakes will result. FULLY apply the brakes (within safe limits for road conditions) in order to quickly slow the truck to maximum "continuous" retarding limits or less.

NOTE: *The "three minute" curve is a MINIMUM; the actual time limit could be greater. Ambient temperature, barometric pressure and recent motor power levels can affect this number.*

The "short term" rating will successfully accommodate most downhill loaded hauls. It is necessary to divide haul road grade segment length by allowable speed to determine actual time on grade. If actual time on the grade exceeds the allowable limits, the grade will need to be negotiated at the "continuous" speed.

The "continuous" numbers on the chart indicate the combination of speeds and grades which the vehicle can safely negotiate for unlimited time or distance during retarding.

DO NOT exceed these recommended MAXIMUM speeds when descending grades with a loaded truck.

OVERHEAD PANEL AND DISPLAYS

The items listed below are located on the overhead panel. Refer to Figure 32-1 for the location of each item. A brief description of each component is documented below.

Radio Speakers

Radio speakers (9, Figure 32-1) for the AM/FM Stereo cassette are located at the far left and right of the overhead panel.

Warning Alarm Buzzer

Warning alarm buzzer (10, Figure 32-1) will sound when activated by any one of several truck functions. Refer to Instrument Panel and Indicator Lights in this section for a detailed description of functions and indicators that will activate this alarm.

Cab Radio (Optional)

This panel will normally contain AM/FM Stereo Cassette (11, Figure 32-1). Refer to Section 70 for a more complete description of the radio and its functions. Individual customers may use this area for other purposes, such as a two-way communications radio.

Warning Indicator Light Dimmer Control

Dimmer control (12, Figure 32-1) permits the operator to adjust the brightness of warning indicator lights (13).

Status/Warning Indicator Light Panel

Panel (13, Figure 32-1) contains an array of indicator lights to provide the operator with important status messages concerning selected truck functions. Refer to Instrument Panel and Indicator Lights in this section for a detailed description of these indicators.

Air Cleaner Vacuum Gauges

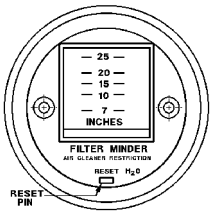

Air cleaner vacuum gauges (14, Figure 32-1) provide a continuous reading of the maximum air cleaner restriction reached during operation. The air cleaner(s) should be serviced when the gauge(s) shows the maximum recommended restriction of 25 inches of H_2O vacuum.

NOTE: *After service, push the reset button on face of gauge to allow the gauge to return to zero.*

Windshield Wipers

Windshield wipers (15, Figure 32-1) are powered by an electric motor. Refer to Steering Wheel And Controls in this section for a location and description of the windshield wiper and washer controls.

CENTER CONSOLE

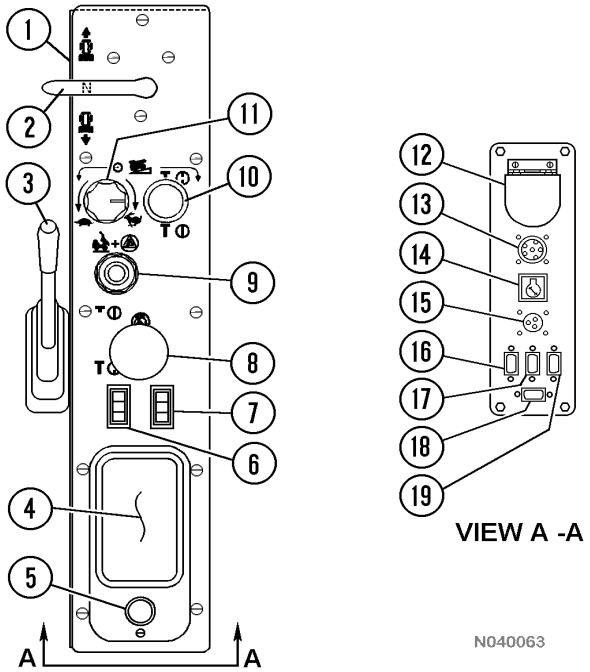

FIGURE 32-3. CENTER CONSOLE

1. Center Console
2. F-N-R Selector Switch
3. Hoist Control Lever
4. Ash Tray
5. Cigar/Cigarette Lighter
6. L.H. Window Control Switch
7. R.H. Window Control Switch
8. Engine Shutdown Switch
9. Override/Fault Reset Switch
10. RSC Switch
11. Retarder Speed Control Dial
12. Data Store Button
13. Engine Diagnostic Port (QUANTUM)
14. Service Engine Light (Blue)
15. Engine Diagnostic Port (CENSE)
16. Payload Meter III
17. Truck Control Interface (TCI)
18. Modular Mining Port (Optional)
19. Propulsion System Controller (PSC) Diagnostic Port

F-N-R Selector Switch

Selector switch (2, Figure 32-3) is mounted on a console to the right of the operator's seat. It is a three position switch that controls the forward-neutral-reverse motion of the truck. When the selector switch handle is in the center "N" position, it is in NEUTRAL. **The handle must be in NEUTRAL to start the engine.**

The operator can select FORWARD drive by moving the handle forward.

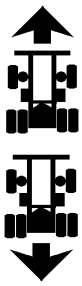

The operator can select REVERSE drive by moving the handle to the rear.

NOTE: *The truck must be stopped before the selector handle is moved to a drive position.*

Hoist Control Lever

Hoist control (3, Figure 32-3) is a four position hand-operated lever located between the operator seat and the center console (see illustration below).

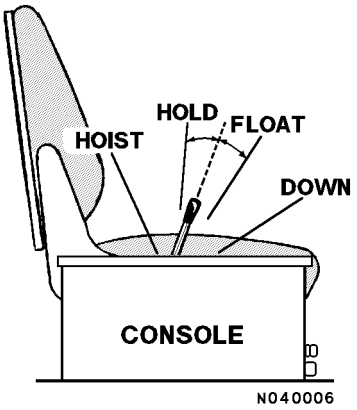

Raising The Dump Body

1. Pull the lever to the rear to actuate hoist circuit. (Releasing the lever anywhere during "hoist up" will place the body in HOLD at that position.)
2. Raise engine rpm to increase hoist speed.
3. Reduce engine rpm as the last stage of the hoist cylinders begin to extend and then let the engine go to low idle as the last stage reaches half-extension.
4. Release hoist lever as the last stage reaches full extension.
5. After material being dumped clears the body, lower the body to frame.

Refer to Operating Instructions - Dumping, for more complete details concerning this control

Lowering The Dump Body

Move hoist lever forward to DOWN position and release. Releasing the lever places hoist control valve in the FLOAT position allowing the body to return to frame.

Ash Tray

Ash tray (4, Figure 32-3) is used for extinguishing and depositing smoking materials. DO NOT use for flammable materials such as paper wrappers, etc. **Be certain that all fire ash is extinguished!**

Lighter

Lighter (5, Figure 32-3) may be used for lighting cigars and cigarettes. **Always use caution with smoking materials!**

This socket may also be used for a 12 VDC power supply.

L.H. Window Control Switch

Control switch (6, Figure 32-3) is spring-loaded to the OFF position.

- Pushing the front of the switch raises the left side cab window.
- Pushing the rear of the switch lowers the window.

R.H. Window Control Switch

Control switch (7, Figure 32-3) is spring-loaded to the OFF position.

- Pushing the front of the switch raises the right side cab window.
- Pushing the rear of the switch lowers the window.

Engine Shutdown Switch

Engine shutdown switch (8, Figure 32-3) is used for engine shutdown. Pull the switch up to stop the engine. Push the switch back down to enable engine operation.

SWITCH UP
ENGINE OFF

SWITCH DOWN
ENGINE ON

Use this switch to shutdown the engine if the key-switch should fail to operate, or to stop the engine without turning off the 24 VDC electrical circuits.

A ground level engine shutdown switch is also located at the right front corner of the truck.

Override/Fault Reset Switch

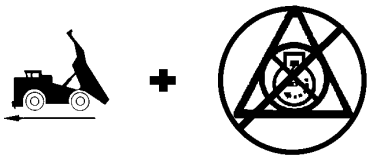

This push-button switch (9, Figure 32-3) is spring-loaded to the OFF position. When pushed in and held, this switch may be used for several functions.

1. This switch permits the operator to override the body-up limit switch and move the truck forward when the selector switch is in FORWARD, the dump body is raised, and the brakes are released.

Use of the override switch for this purpose is intended for emergency situations only!

2. The push button deactivates the retard pedal function when speed of truck is below 3 mph (4.8 kph).
3. The override switch is also used to reset an electric system fault when indicated by a red warning light. Refer to Overhead Status/Warning Indicators in this section.

Retard Speed Control (RSC) Switch

Retard speed control switch (10, Figure 32-3) turns the system on and off. Push the knob in for OFF and pull the knob out to turn the system ON.

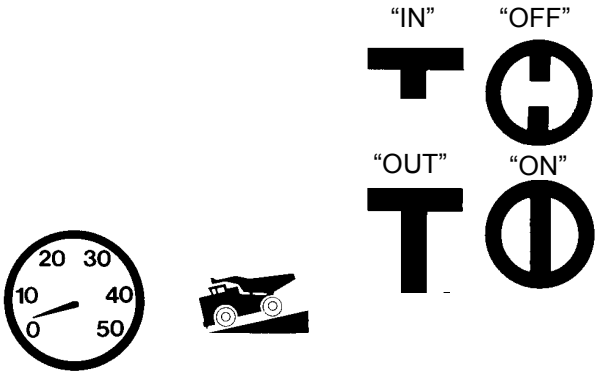

Retard Speed Control (RSC) Adjust Dial

RSC adjust dial (11, Figure 32-3) allows the operator to vary the downhill truck speed that the retard speed control system will maintain when descending a grade. This function can be overridden by either the accelerator, retard lever, or retard pedal.

When the dial is rotated counterclockwise toward this symbol, the truck will descend a grade at lower speeds.

When the dial is rotated clockwise toward this symbol, the truck speed will increase.

Always refer to the Grade/Speed Retard Chart in the operator's cab and follow the recommendations for truck operation. DO NOT exceed these recommended MAXIMUM speeds when descending grades with a loaded truck.

Throttle pedal position will override RSC setting. If operator depresses throttle pedal to increase truck speed, dynamic retarding will not come on unless truck overspeed setting is reached or foot operated retard pedal is used. When throttle pedal is released and RSC switch is on, dynamic retarding will come on at, or above, the RSC dialed speed and will adjust truck speed to, and maintain, the dialed speed.

To adjust RSC control, pull switch (11) ON and start with dial (12) rotated toward fastest speed while driving truck at desired maximum speed. Relax throttle pedal to let truck coast and turn RSC adjusting dial slowly counterclockwise until dynamic retarding is activated. Dynamic retarding will now be activated automatically anytime the "set" speed is reached, the RSC switch is on, and throttle pedal is released.

With RSC switch on and dial adjusted, the system will function as follows: As truck speed increases to the "set" speed and throttle pedal released, dynamic retarding will apply. As truck speed tries to increase, the amount of retarding effort will automatically adjust to keep the selected speed. When truck speed decreases, the retarding effort is reduced to maintain the selected speed. If truck speed continues to decrease to approximately 3 mph (4.8 kph) below "set" speed, dynamic retarding will turn off automatically. If truck speed must be reduced further, the operator can turn the adjust dial to a new setting or depress the foot operated retard pedal.

If the operator depresses the foot operated retard pedal and the retard effort called for is greater than that from the automatic system, the foot pedal retard will override RSC.

Data Store Button

This button (12, Figure 32-3) is for use by qualified maintenance personnel to record in memory a “snap-shot” of the A/C drive system.

Engine Control System

This 9-PIN connector (13, Figure 32-3) is for use by qualified personnel to access the diagnostic information for the engine control system. (QUANTUM)

Service Engine Light

Service engine light (14, Figure 32-3) is a blue indicator that will illuminate if a problem is detected by the electronic engine monitoring system.

Electric propulsion and dynamic retarding will still be available.

If this light is ON, notify maintenance personnel so they can diagnose and repair the problem the next time the truck is in the shop for repairs or at the next PM (Preventive Maintenance) interval.

Engine Diagnostic Download Port

This 3-pin connector (15, Figure 32-3) is for use by qualified personnel to access the diagnostic information for the engine monitoring system. (CENSE).

Payload Meter Port

Payload meter port (16, Figure 32-3) is for use by qualified maintenance personnel to download data from the payload meter system. Refer to Section 60, Payload Meter III, for a more complete description of the payload meter and its functions.

TCI Download Port

This connector (17, Figure 32-3) is for use by qualified personnel to access the Truck Control Interface (TCI) diagnostic information and data.

Modular Mining System (Optional)

This connector (18, Figure 32-3) is for use by qualified personnel to access the Modular Mining System for diagnostic information and data.

PSC Download Port

PSC download port (19, Figure 32-3) is for use by qualified personnel to access diagnostic information for the Propulsion System Controller (PSC).

Payload Meter And Download Connector

Payload meter (1, Figure 32-4) and download connector (2) are used to provide management with operational data such as tonnage hauled and cycle times. The download connector is to be used with a special cable to allow the payload meter to communicate with a portable computer

Refer to Section 60, Payload Meter III, for a more complete description of the payload meter and its functions.

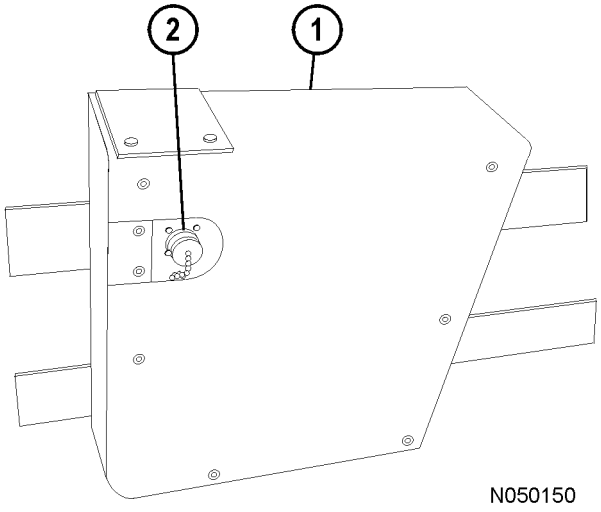

FIGURE 32-4. PAYLOAD METER III

1. Payload Meter III
2. Download Connector

OPERATOR'S SEAT

The operator's seat provides a fully adjustable cushioned ride for driver comfort and easy operation.

Adjustment

The following adjustments must be made while sitting in the seat.

1. **Headrest:** (1, Figure 32-5) will move up, down, fore, or aft by moving headrest to desired position.
2. **Armrests:** rotate adjusting knob until armrest is in desired position.
3. **Backrest:** Lift handle (3) to release and select backrest angle: release control handle to set.
4. **Seat Belt:** Operator should always have seat belt (4) buckled in place and properly adjusted whenever vehicle is in motion.
5. **Seat Slope:** Lift lever (5) and hold to adjust the slope of the seat. Release lever to lock adjustment.
6. & 7 **Air Lumbar Support:** Each rocker switch (6 or 7) controls an air pillow. Switch (7) controls the lower air pillow and switch (6) controls the upper air pillow. To inflate, press on top of rocker switch and hold for desired support, then release. To deflate, press on bottom of rocker switch and hold for desired support, then release. Adjust each pillow for desired support.
8. **Seat Suspension:** Press rocker switch (8) on top to increase ride firmness. Press on lower part of rocker switch to decrease ride firmness.
9. **Fore/Aft Location of Seat:** Lift lever (9) and hold. Bend knees to move seat to a comfortable position: release control lever to lock adjustment.
12. **Seat Height:** Lift lever (12) and hold to adjust the height of the seat. Release lever to lock adjustment.

Seat Removal

1. Remove hardware (10, Figure 32-5) that secures the seat base to the riser. Remove capscrew (11) that secures tether to floor.
2. Remove seat assembly from cab and take to clean work area for disassembly.

Seat Installation

1. Mount seat assembly to seat riser. Install capscrews (10, Figure 32-5), lockwashers, flat washers and nuts. Tighten to standard torque.
2. Fasten tether straps to floor with capscrews (11), flat washers and lockwashers. Tighten capscrews to standard torque.

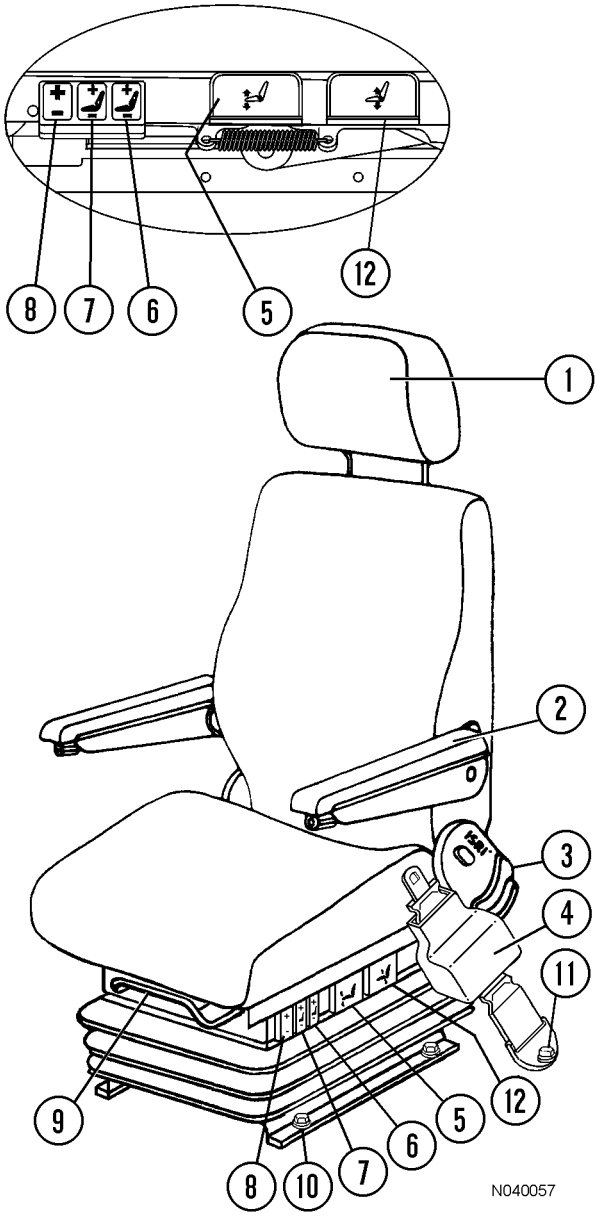

FIGURE 32-5. OPERATOR'S SEAT ADJUSTMENT CONTROLS

1. Headrest
2. Armrest Adjustment
3. Backrest Adjustment
4. Seat Belt
5. Seat Slope Adjustment
6. Upper Air Pillow Lumbar Support
7. Lower Air Pillow Lumbar Support
8. Height Adjustment
9. Fore and Aft Adjustment
10. Mounting Hardware
11. Seat Tether Capscrew
12. Seat Height Adjustment

HEATER / AIR CONDITIONER COMPARTMENT AND CONTROLS

The heater/air conditioner compartment contains the heater/air conditioner controls (6, Figure 32-1) and some of the heater/air conditioner components, such as the blower motor assembly and heater coils. Optimum cab air climate can be selected by using the following controls in various combinations.

Heater/Air Conditioner Vents

Each heater/air conditioner vent (6, Figure 32-6) is a flapper type which may be opened or closed or rotated 360° for optimum air flow. There are four (three not shown) across the top of the panel, one each in the right and left panel modules, and four below the panel.

Defroster Control Switch

Defroster control switch (1, Figure 32-6) directs heated air for windshield defrosting. "Down" position of the toggle switch is OFF. "Up" position of the toggle switch is ON.

Heat Control Switch

Heater control (2, Figure 32-6) directs heated air to the cab floor for heating of the cab. "Down" position of the toggle switch is OFF. "Up" position of the toggle switch is ON.

Temperature Control Knob

Temperature control knob (3, Figure 32-6) allows the operator to select a comfortable temperature.

Rotating the knob counter-clockwise (blue arrow) will select cooler temperatures. Full counter-clockwise position is the coldest air setting. Rotating the knob clockwise (red arrow) will select warmer temperatures. Full clockwise position is the warmest heater setting.

Fan Control Knob

Fan control knob (4, Figure 32-6) controls the cab air fan motor. The fan motor is a 3-speed motor: low (setting 1), medium (setting 2), and high (setting 3). Speeds are selected by rotating the control knob clockwise to the desired position. OFF is full counter-clockwise position (setting 0).

Heater/Air Conditioner Selector Switch

Selector switch (5, Figure 32-6) allows the operator to select heat, A/C, or neither. The left position of the switch activates the air conditioning and the right side of the switch activates the heater. The middle position is OFF. Neither the heat nor the air conditioning can be activated in this position.

NOTE: *The air conditioner will not operate unless the fan control knob is turned ON.*

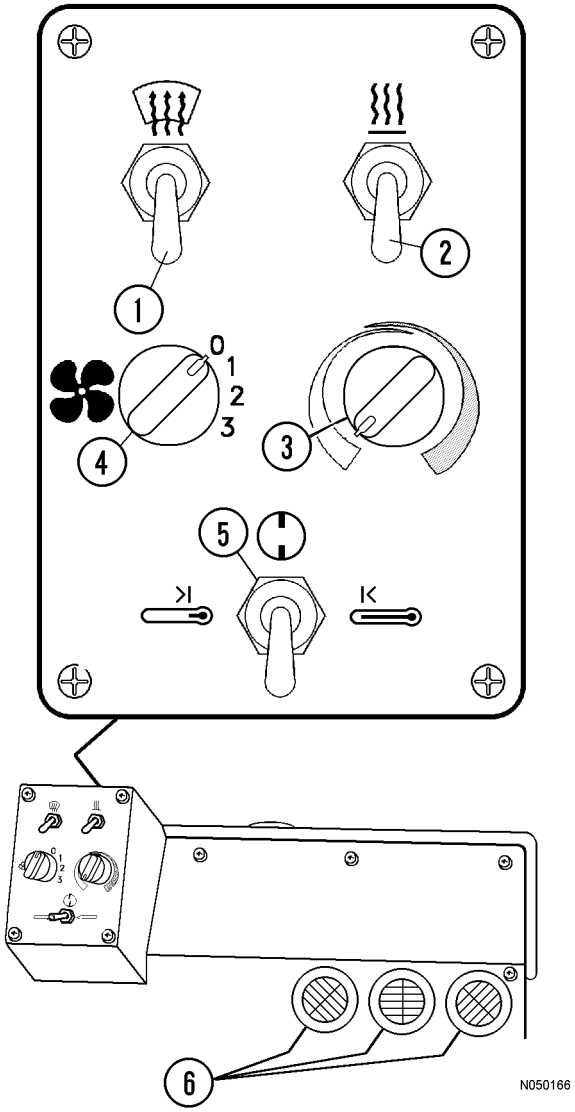

FIGURE 32-6. A/C & HEATER CONTROLS

INSTRUMENT PANEL

The operator must understand the function and operation of each instrument and control. Control functions are identified with "international" symbols that the operator should learn to recognize immediately. This knowledge is essential for proper and safe operation.

Items that are marked “optional” do not apply to every truck.

Control Symbols

Many control functions are identified with international symbols that the operator should learn to recognize immediately. The operator must understand the function and operation of each instrument and control. This knowledge is essential for proper and safe operation of the machine.

The following symbols are general indicators and may appear in multiple locations and combinations on the instrument panel.

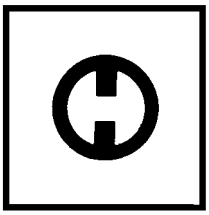

This symbol may be used alone or with another symbol. This symbol identifies the OFF position of a switch or control.

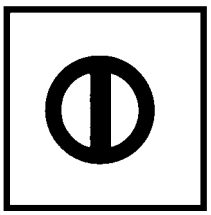

This symbol may be used alone or with another symbol. This symbol identifies the ON position of a switch or control.

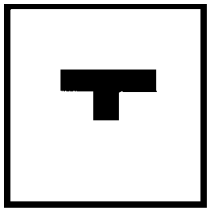

This symbol identifies the "Pushed-In" position of a push-pull switch or control.

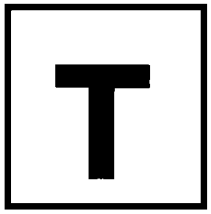

This symbol identifies the "Pulled-Out" position of a push-pull switch or control.

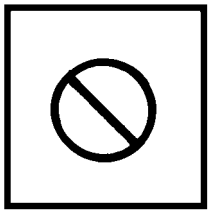

This symbol when it appears on an indicator or control identifies that this indicator or control is NOT used.

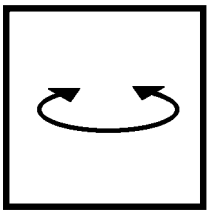

This symbol identifies a rotary control or switch. Rotate the knob clockwise or counterclockwise for functions.

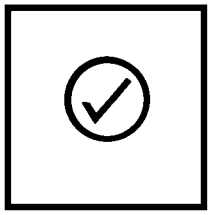

This symbol identifies a switch used to test or check a function. Press the switch on the side near the symbol to perform the test.

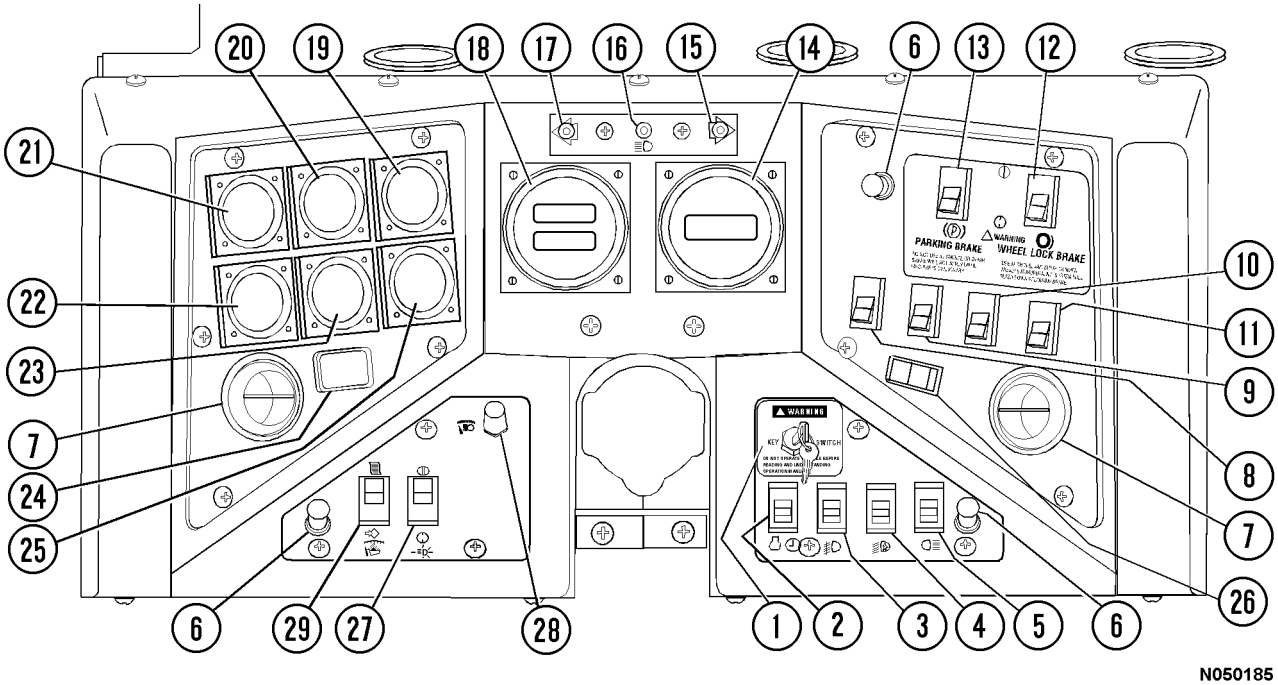

FIGURE 32-7. PANEL GAUGES, INDICATORS, AND CONTROLS

1. Key Switch
2. Engine Shutdown Switch with Timer Delay
3. Fog Light Switch (N./O.)
4. Ladder Light Switch (3-Way)
5. Backup Light Switch (N.O.)
6. Panel Illumination Light(s)
7. Vent(s) - Cab Air Conditioner/Heater
8. Spare
9. Rotating Beacon Light Switch (N.O.) (Optional)
10. Heated Mirror Switch (N.O.) (Optional)
11. Spare
12. Wheel Brake Lock Switch (N.O.)
13. Parking Brake Switch (N.O.)
14. Digital Tachometer
15. Right Turn Signal Indicator Light
16. High Beam Headlight Indicator Light
17. Left Turn Signal Indicator Light
18. Digital Speedometer / Payload Meter
19. Voltmeter Gauge
20. Engine Oil Pressure Gauge
21. Engine Water Temperature Gauge
22. Fuel Gauge
23. AC Drive System Temperature
24. Engine Hour Meter
25. Hydraulic/Brake Oil Temperature
26. AC Rest Switch
27. Headlights Switch (N.O.)
28. Panel Illumination Lights Dimmer Rheostat
29. Payload Meter Switch

Key Switch

Key switch (1, Figure 32-7) is a three-position (OFF, RUN, START) switch.

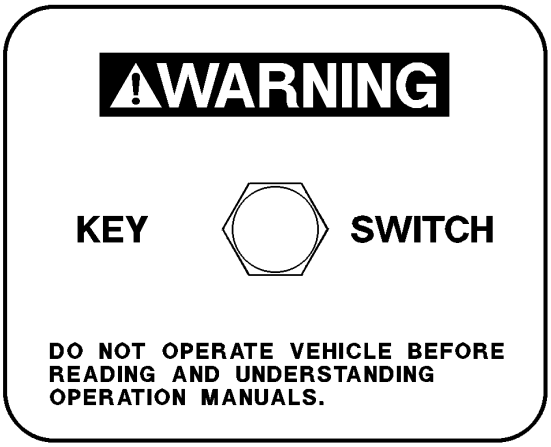

Starting

When the switch is rotated one position clockwise, it is in the RUN position and all electrical circuits (except START are activated).

1. With selector switch in NEUTRAL, rotate keyswitch fully clockwise to START position, and hold this position until engine starts. START position is spring-loaded to return to RUN when key is released.
2. After engine has started, place rest switch in OFF position (de-activate the "rest" mode of operation). Refer to the discussion of rest switch (26, Figure 32-7) later in this chapter.

Engine Shutdown Switch with 5 Minute Idle Timer Delay

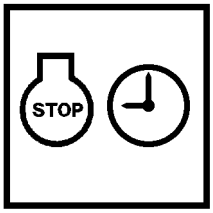

The timer delayed, engine shutdown switch (2, Figure 32-7) is a 3-position, rocker type switch with OFF, ON and MOMENTARY positions. When used, the engine is allowed to idle for approximately 5 minutes before actual shutdown occurs. The delayed shutdown feature allows the engine to cool down slowly, reducing internal temperatures as coolant is circulated through the engine.

Operation

1. Stop the truck, and reduce engine rpm to low idle. Place the selector switch in NEUTRAL and apply the parking brake switch. Place the rest switch in ON position (put drive system in "rest" mode of operation). Refer to the discussion of the rest switch later in this chapter.
2. Press the top of the engine shutdown switch to select the ON (center) position. Press the top of the switch again to activate the timer delay (MOMENTARY position). Release the switch and allow it to return to the ON position.

   When the engine shutdown timer has been activated, the timer delay indicator light (C4, Figure 32-8) in the overhead status panel will illuminate to indicate that the shutdown timing sequence has started. The engine will continue to idle for approximately 5 minutes to allow for proper engine cool-down before stopping.
3. Turn the keyswitch counterclockwise to the OFF position to cause the engine to shutdown when the timing sequence is complete. When the engine stops, this will activate the hydraulic bleeddown timer and turn off the 24 VDC electric circuits controlled by the keyswitch.

NOTE: *To cancel the 5 minute idle timer sequence, press the timer delay shutdown switch to the OFF (lower) position. If the keyswitch is in the OFF position, the engine will stop. If the keyswitch is in the ON position, the engine will continue to run.*

4. With keyswitch OFF, and engine stopped, wait at least 90 seconds. Ensure the steering circuit is completely bled down by turning the steering wheel back and forth several times. No front wheel movement will occur when hydraulic pressure is relieved.
5. Verify all the link voltage lights turn off within 5 minutes after the engine is shut down. (One is located in the cab behind the operator seat, two others are located in the access panel at the left front corner of the electrical cabinet. If the lights remain on, refer to Section E in the service manual for additional instructions and information.
6. Close and lock all windows, remove key from keyswitch and lock cab to prevent possible unauthorized truck operation. Dismount the truck properly.

Fog Lights (Optional)

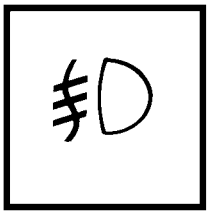

Fog lights (3, Figure 32-7) are optional equipment that are useful in foggy conditions and heavy rain. Pressing the top of the rocker switch turns the lights on. Pressing the bottom of the switch turns the lights off.

Ladder Light Switch

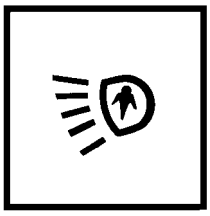

Ladder light switch (4, Figure 32-7) turns the ladder lights on or off after or before using ladder. Pressing the top of the rocker switch turns the lights on. Pressing the bottom of the switch turns the lights off. Another switch is mounted at the front left of truck near the base of ladder.

Manual Backup Switch

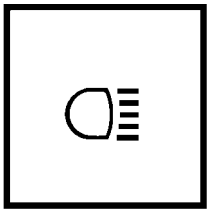

Manual backup switch (5, Figure 32-7) allows backup lights to be turned on for added visibility and safety when the selector switch (see Operator Controls) is not in REVERSE position. When the switch is in the ON position, the manual back up light indicator (B4, overhead panel, Figure 32-8) will be illuminated.

Panel Illumination Lights

Panel illumination lights (6, Figure 32-7) provide illumination for the instrument panel. Brightness is controlled by the panel light dimmer switch (28).

Cab/Air Conditioner Vents

Cab/air conditioner vents (7, Figure 32-7) are spherically mounted and may be directed by the operator to provide the most comfortable cabin air flow.

(8, Figure 32-7) Not Used

Spare switch location that customer can utilize.

Rotating Beacon Light Switch (Optional)

The optional rotating beacon light is activated by rocker-type switch (9, Figure 32-7) when it is switched to the ON position.

Heated Mirror Switch (Optional)

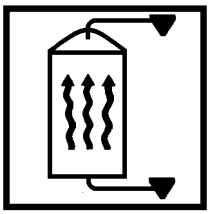

The optional heated mirror is activated by this rocker-type switch (10, Figure 32-7) when it is switched to the ON position.

(11, Figure 32-7) Not Used

Spare switch location that customer can utilize.

Wheel Brake Lock Control

Wheel brake lock control (12, Figure 32-7) should be used with engine running for dumping and loading operations only. The brake lock switch actuates the hydraulic brake system which locks the **rear wheel service brakes only**. When pulling into shovel or dump area, stop the truck using the foot-operated service brake pedal. When truck is completely stopped and in loading position, apply the brake lock by pressing the rocker switch toward the ON symbol. To release, press the rocker switch toward the OFF symbol.

WARNING

Do not use this switch to stop the truck unless foot-operated treadle valve is inoperative. Use of this switch applies rear service brakes at a reduced, unmodulated pressure. Do not use brake lock for parking. With engine stopped, hydraulic pressure will bleed down, allowing brakes to release.

Use at shovel and dump only to hold truck in position.

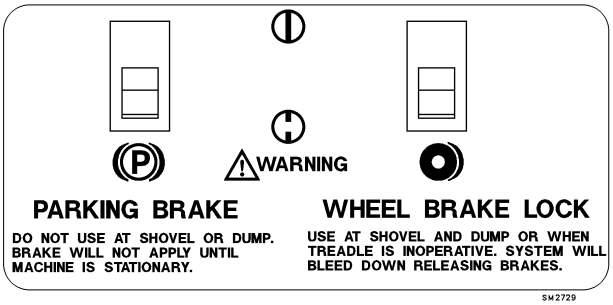

Parking Brake Control

The parking brake is spring applied and hydraulically released. It is designed to hold a stationary truck when the engine is shutdown and keyswitch is turned OFF. The truck must be completely stopped before applying the parking brake, or damage may occur to parking brake. To apply the parking brake, press parking brake control switch (13, Figure 32-7) toward the ON symbol. To release the parking brake, press the switch toward the OFF symbol. When the keyswitch is ON and parking brake switch is applied, the parking brake indicator light (A3, overhead panel, Figure 32-8) will be illuminated.

NOTE: *Do not use the parking brake at shovel or dump. With key switch ON and engine running, sudden shock caused by loading or dumping could cause the system's motion sensor to release the park brake.*

Tachometer

Tachometer (14, Figure 32-7) registers engine crankshaft speed in hundreds of revolutions per minute (rpm).

Governed rpm

Low Idle - 750 rpm

High Idle - 1910 rpm

Full Load - 1900 rpm

Right Turn Signal Indicator

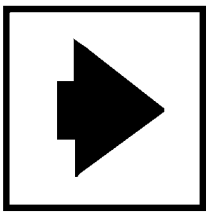

Indicator (15, Figure 32-7) illuminates to indicate that the right turn signals are operating when the turn signal lever on the steering column is moved upward. Moving the lever to its center position will turn the indicator off.

High Beam Indicator

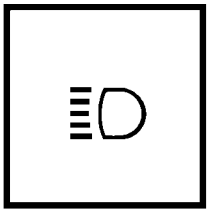

When lit, high beam indicator (16, Figure 32-7) indicates that the truck headlights are on high beam. To switch the headlights to high beam, push the turn indicator lever away from the steering wheel. For low beam, pull the lever toward the steering wheel.

Left Turn Signal Indicator

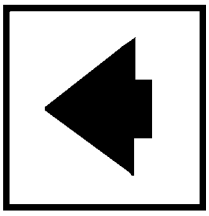

Indicator (17, Figure 32-7) illuminates to indicate that the left turn signals are operating when the turn signal lever on the steering column is moved downward. Moving the lever to its center position will turn the indicator off.

Speedometer/Payload Meter Display

Speedometer/payload meter display (18, Figure 32-7) indicates the truck speed in miles per hour (mph) or in kilometers per hour (kph). The display also shows payload meter information. For more information, see Section 60, Payload Meter III, in this manual.

Voltmeter

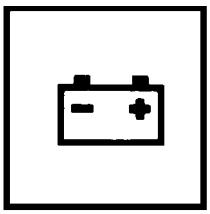

Voltmeter (19, Figure 32-7) indicates the voltage of the 24V battery system. Normal indicated voltage at high rpm is 27 to 28 volts with batteries in fully charged condition. When key switch (10) is ON and engine is *not* running, voltmeter indicates battery charge condition.

Engine Oil Pressure Gauge

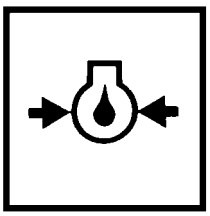

Engine oil pressure gauge (20, Figure 32-7) indicates pressure in the engine lubrication system in pounds per square inch (psi).

Normal operating pressure after engine warm up should be:

Idle - 20 psi (138 kPa) Minimum
Rated Speed - 45 to 70 psi (310 - 483 kPa)

Water Temperature Gauge

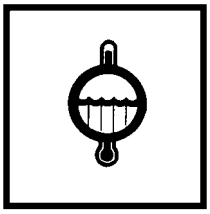

Water temperature gauge (21, Figure 32-7) indicates the temperature of the coolant in the engine cooling system. The temperature range after engine warm-up and truck operating under normal conditions should be:

185°-207°F (85°-97°C)

Fuel Gauge

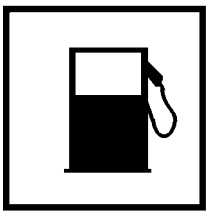

Fuel gauge (22, Figure 32-7) indicates how much diesel fuel is in the fuel tank.

The fuel tank capacity is 1200 gallons (4542 liters).

AC Drive System Temperature Gauge

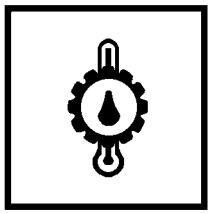

AC drive system temperature gauge (23, Figure 32-7) indicates the drive system temperature. There are three colored bands: green; yellow; and red. Green indicates normal operation.

Yellow indicates that the system temperature is rising. There is also an amber (yellow) temperature warning light in the overhead panel (C5, Figure 32-8) that will illuminate when the temperature exceeds a certain level. When this condition occurs, the operator should consider changing truck operation in order to reduce system temperature.

CAUTION

If the AC drive system temperature reaches the red band, continued operation could damage components in the system. Safely stop the truck, shut down the engine, and notify maintenance personnel immediately.

Hourmeter

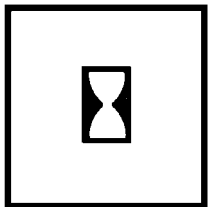

Hourmeter (24, Figure 32-7) registers the total number of hours the engine has been in operation.

Hydraulic Oil Temperature Gauge

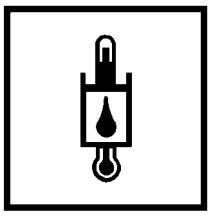

Hydraulic oil temperature gauge (25, Figure 32-7) indicates oil temperature in the hydraulic tank. There are two colored bands: green and red.

Green indicates normal operation.

As the needle approaches the red zone, minimum engine idle speed will increase to help cool the oil.

Red indicates high oil temperature in the hydraulic tank. Continued operation could damage components in the hydraulic system. There is also a red temperature warning light in the overhead panel (A1, Figure 32-8) that will illuminate when the temperature exceeds a certain level (when the needle enters the red zone). If this condition occurs, the operator should safely stop the truck, move selector switch to NEUTRAL, apply the park brake, and operate engine at 1200 - 1500 rpm to reduce system temperature.

If temperature gauge does not move into the green range after a few minutes, and the red overhead indicator light does not go out, shut down the truck and notify maintenance personnel immediately.

Rest Switch

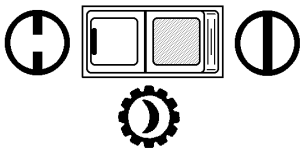

Rest switch (26, Figure 32-7) is a rocker type switch with a locking device for the OFF (left side) position. When in this position, a small black tab must be pushed to the left to unlock the switch before it can be depressed to switch to the ON (right side) position. When in the ON position, an internal amber lamp will illuminate. The switch should be activated to de-energize the AC drive system whenever the engine is to be shutdown or parked for a length of time with the engine running.

The selector switch must be in NEUTRAL and the vehicle not moving to enable this function. This will allow the engine to continue running while the AC drive system is de-energized.

WARNING

Activation of the rest switch alone DOES NOT completely ensure that the drive system is safe to work on. Refer to Section 20, Safety, for more information on servicing a 930E truck. Check all "link-on", or "link energized", indicator lights to verify the AC drive system is de-engergized before performing any maintenance on the drive system. DO NOT activate the rest switch while the truck is moving! The truck may unintentionally enter the "rest" mode after stopping.

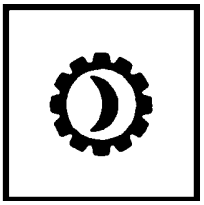

An amber (yellow) indicator light in the overhead panel (B6, Figure 32-8) will illuminate when the "rest" state has been requested and entered.

Light Switch

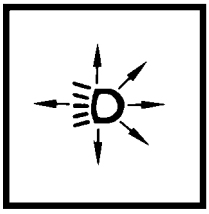

The instrument panel lights, clearance lights, and the headlights are controlled by this three-position rocker type switch (27, Figure 32-7). OFF is selected by pressing the bottom of the switch. Press the top of the switch until it reaches the first detent to select the panel lights, clearance lights and tail lights only. Press the top of the switch again until it reaches the second detent to select headlights, panel lights, clearance lights and tail lights.

Panel Light Dimmer

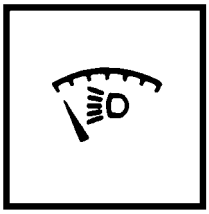

Panel light dimmer control (28, Figure 32-7) is a rheostat which allows the operator to vary the brightness of the instruments and panel lights.

- Rotating knob to the full counterclockwise position turns panel lights on to brightest condition.
- Rotating knob clockwise continually dims lights until OFF position is reached at full clockwise rotation.

Payload Meter Switch

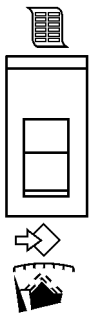

Payload meter switch (29, Figure 32-7) is a two-way, momentary rocker switch. The top position is the SELECT position. The SELECT position is used to step through the different displays. The lower position is the SET position. The SET position is used to set the operator ID, or clear the load and total ton counters. Refer to Section 60, Payload Meter III, for a more complete description of the payload meter system and its functions.

OVERHEAD STATUS / WARNING INDICATORS

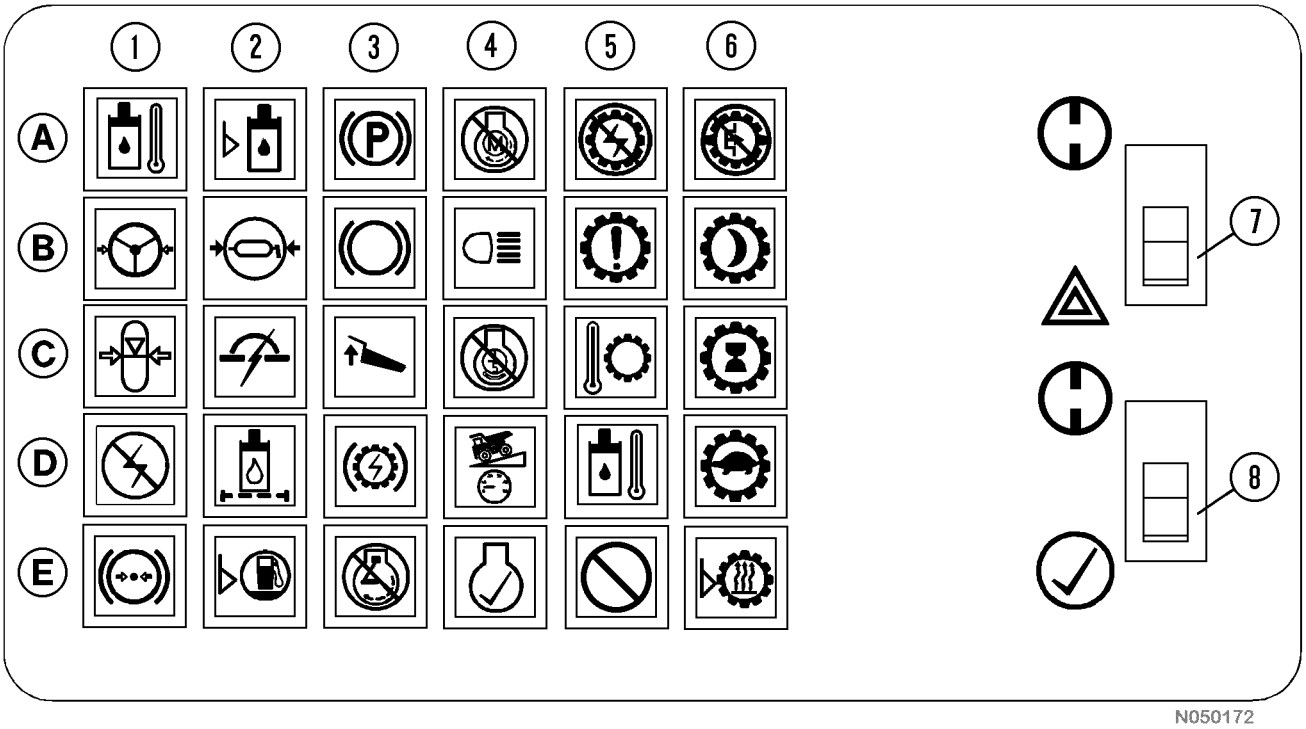

FIGURE 32-8. OVERHEAD STATUS / WARNING INDICATOR

Row / Column	Indicator Description	Indicator Color Wire Index
A1*	Hydraulic Oil Temp. High	Red-12FD3/34TL
B1*	Low Steering Pressure	Red-12FD/33A
C1	Low Accumulator Press.	Red-12F/33K
D1	Electric System Fault	Red-12F/79V
E1	Low Brake Pressure	Red-12F/33L
A2*	Hydraulic Tank Level	Red-12F4/34LL
B2*	Low Automatic Lubrication Pressure	Amber-12FD8/ 68LLP
C2*	Circuit Breaker Tripped	Amber-12FD/31CB
D2*	Hydraulic Oil Filter	Amber-12FD/39
E2*	Low Fuel	Amber-12F5/38
A3*	Park Brake Applied	Amber-12MD/52A
B3*	Service Brake Applied	Amber-12MD/44L
C3*	Body Up	Amber-12MD6/63L
D3*	Dynamic Retarding	Amber-12MD/44DL
E3	Stop Engine	Red-12M/509MA
A4*	Starter Failure	Amber-21SL/710
B4*	Manual Back-Up Lights	Amber-12MD/47L
C4*	5 Min. Shutdown Timer	Amber-12MD/23L1
D4*	Retard Speed Control	Amber-12MD/31R
E4*	Check Engine	Amber-12MD7/419

Row / Column	Indicator Description	Indicator Color Wire Index
A5	No Propel/ No Retard	Red-12M/75-6PI
B5	Propulsion System Warning	Amber-12F/79WI
C5	Propulsion System Temperature	Amber -12F/34TW
D5	Hydraulic Brake Oil Temperature High	Red-12F/34TGI
E5	Not Used	Red-12M/528A
A6	NO PROPEL	Red-12M/75NPI
B6	Propulsion System @ Rest	Amber-12M/72PR
C6*	Propulsion System Not Ready	Amber-12MD/72NR
D6*	Reduced Propulsion System	Amber-12MD/72LP
E6*	Retard @ Continuous Level	Amber-12MD/76LR
-Switches-		
7	Hazard Lights Switch (N.O.)	11L/45L/45R
8	Lamp Check Switch (N.O.) (momentary)	33H/528/710/712P

** Brightness for these indicator lamps can be adjusted by using dimmer control (12, Figure 32-1).*

Status / Warning Indicator Light Symbols

Indicator lights which are amber (yellow) in color alert the operator that the indicated truck function requires some precaution when lighted.

Indicator lights which are red in color alert the operator that the indicated truck function requires **immediate action** by the operator. Safely stop the truck and shut down the engine.

DO NOT OPERATE THE TRUCK WITH A RED WARNING LIGHT ILLUMINATED!

Refer to Figure 32-8 and the descriptions below for explanations of the symbols. Location of the symbols is described by rows (A - E) and columns (1 - 6).

A1. High Hydraulic Oil Temperature

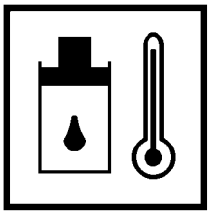

This red warning light indicates high oil temperature in the hydraulic tank. Several things occur before the red light illuminates:

- If the truck is moving, and the oil temperature exceeds 221° F (105° C), the minimum idle speed will be 1200 rpm (normally 1050).
- If the truck is moving, and the oil temperature goes above 230° F (110° C), the minimum idle speed will be 1700 rpm (normally 1050).
- If the truck is stopped, and the oil temperature goes above 212° F (100° C) the minimum idle speed will be 1000 rpm (normally 750).

NOTE: *Once the oil cools down to the normal operating range, the engine rpm will return to normal speed.*

- The red warning light will illuminate if the oil temperature rises above 248° F (120° C). Continued operation could damage components in the hydraulic system.

If this condition occurs, the operator should safely stop the truck, move selector switch to NEUTRAL, apply the parking brake, and operate engine at 1200 - 1500 rpm to reduce system temperature.

If temperature gauge (25, Figure 32-7) does not move into the green range after a few minutes, and the red overhead indictor light does not go out, notify maintenance personnel immediately.

B1. Low Steering Pressure

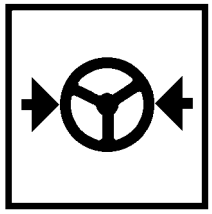

When the keyswitch is turned ON, the low steering pressure warning light will illuminate until the steering system hydraulic pressure reaches 2300 psi (15.9 MPa). The warning horn will also turn on, and both will remain on, until the accumulator has been charged.

During truck operation, the low steering pressure warning light and warning horn will turn sound if steering system hydraulic pressure drops below 2300 psi (15.9 MPa).

- If the light illuminates momentarily (flickers) while turning the steering wheel at low truck speed and low engine rpm, this may be considered “normal”, and truck operation may continue.
- If the indicator light illuminates at higher truck speed and high engine rpm, DO NOT OPERATE TRUCK.

⚠WARNING

If the low steering warning light continues to illuminate and the alarm continues to sound, low steering pressure is indicated. The remaining pressure in the accumulators allows the operator to control the truck to a stop. Do not attempt further operation until the malfunction is located and corrected.

C1. Low Accumulator Precharge Pressure

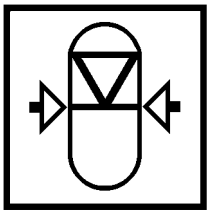

The low accumulator precharge warning light, if illuminated, indicates low nitrogen precharge for the steering accumulator(s). To check for proper accumulator nitrogen precharge, engine must be stopped and hydraulic system completely bled down; turn keyswitch to RUN position. The warning light will *not* illuminate if system is properly charged. The warning light will flash if the nitrogen precharge within the accumulator(s) is below 1100 ± 45 psi (7585 ± 310 kPa).

WARNING

If low accumulator precharge warning light flashes, notify maintenance personnel. Do not attempt further operation until the accumulators have been recharged with nitrogen to 1400 psi (9653 kPa). Sufficient energy for emergency steering may not be available, if system is not properly charged.

D1. Electric System Fault

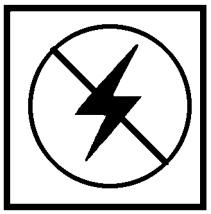

This light is reserved for future use by the AC drive system.

E1. Low Brake Pressure

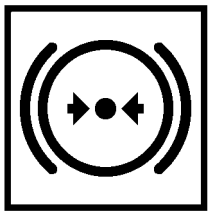

This red indicator light indicates a malfunction within the hydraulic brake circuit. If this light comes on and buzzer sounds, **shut down truck operation** and notify maintenance personnel.

NOTE: *Adequate hydraulic fluid is stored to allow the operator to safely stop the truck.*

A2. Low Hydraulic Tank Level

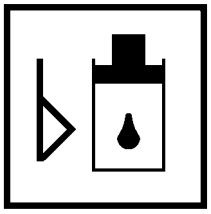

This warning light indicates the oil level in the hydraulic tank is below recommended level. Damage to hydraulic pumps may occur if operation continues. Shut truck down and notify maintenance personnel immediately.

B2. Automatic Lubrication System Pressure

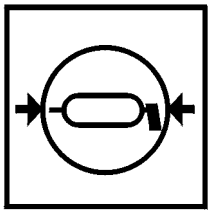

This amber light will illuminate if the automatic lubrication system fails to reach 2,000 psi (13 790 kPa) at the junction block located on the rear axle housing within one minute after the lube timer initiates a cycle of grease. To turn the light off, turn key switch OFF, then back to ON again. Notify maintenance personnel at earliest opportunity after light comes on.

C2. Circuit Breaker Tripped

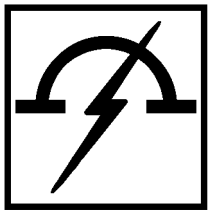

This light will illuminate if any of the circuit breakers in the relay circuit control boards are tripped. The relay circuit boards are located in the electrical control cabinet.

NOTE: *Additional circuit breakers are in the operator cab behind the center console. However, tripping of these circuit breakers should not activate this light.*

D2. Hydraulic Oil Filter Monitor

This light indicates a restriction in the high pressure filter assembly for either the steering or hoist circuit. This light will come on before filters start to bypass. Notify maintenance personnel at earliest opportunity after light comes on.

NOTE: *The filter monitor warning light may also illuminate after the engine is initially started if the oil is cold. If the light turns off after the oil is warmed, filter maintenance is not required.*

E2. Low Fuel

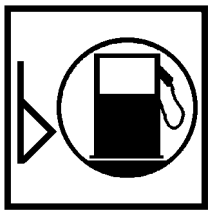

This amber low fuel indicator will illuminate when the usable fuel remaining in the tank is approximately 25 gallons (95 liters). A warning buzzer will also sound.

A3. Parking Brake

This amber parking brake indicator will illuminate when the parking brake is applied. Do not attempt to drive truck with parking brake applied.

B3. Service Brake

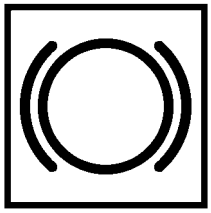

This amber service brake indicator light will illuminate when the service brake pedal is applied or when wheel brake lock or emergency brake is applied. Do not attempt to drive the truck from stopped position with service brakes applied, except as noted in Section 30, Operating Instructions - Starting On A Grade With A Loaded Truck.

C3. Body Up

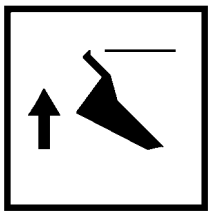

This amber body up indicator, when illuminated, shows that the body is not completely down on the frame. The truck should not be driven until body is down and the light is off.

D3. Dynamic Retarding

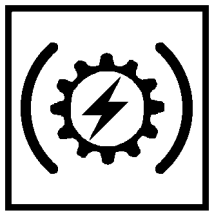

This amber dynamic retarding indicator light illuminates whenever the retarder pedal (or retarder lever) is operated, RSC (Retarder Speed Control) is activated, or the automatic over-speed retarding circuit is energized, indicating the dynamic retarding function of the truck is operating.

E3. Stop Engine

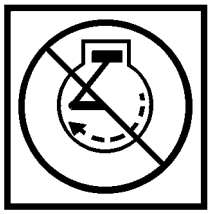

This red engine monitor warning light will illuminate if a serious engine malfunction is detected in the electronic engine control system.

- Electric propulsion to the wheelmotors will be discontinued.
- Dynamic retarding will still be available if needed to slow or stop the truck.

CAUTION

Stop the truck as quickly as possible in a safe area and apply the parking brake. SHUT DOWN THE ENGINE IMMEDIATELY. Additional engine damage is likely to occur if operation is continued.

Listed below are a few conditions that could cause the stop engine light to illuminate:

- Low Oil Pressure - red warning light will illuminate, but engine does not shutdown.
- Low Coolant Level - red warning light will illuminate, but engine does not shutdown.
- Low Coolant Pressure - red warning light will illuminate, but engine does not shutdown.
- High Coolant Temperature - red warning light will illuminate, but engine does not shutdown.

A4. Cranking Motor Failure

This amber indicator will illuminate when either starter motor (of two) fails to crank the engine, leaving just one cranking motor to start the engine. With only one cranking motor doing the work of two, the motor life will be shortened. If this indicator illuminates, truck operation may continue, but maintenance personnel should be alerted as soon as possible.

B4. Manual Backup Lights

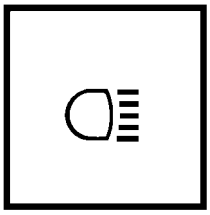

This amber indicator will illuminate when the manually operated manual backup switch (3, Figure 32-7, Instrument Panel) is turned ON.

C4. Engine Shutdown Timer - 5 Minute Idle

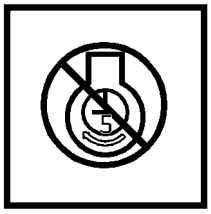

When the engine shutdown timer switch has been activated (2, Figure 32-7, Instrument Panel), this indicator light will illuminate to indicate that the shutdown timing sequence has started. Information detailing the operation of this switch is outlined earlier in this section.

D4. Retard Speed Control (RSC) Indicator

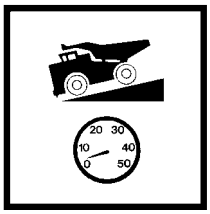

This amber light is illuminated when the RSC switch mounted on the console is pulled out to the ON position. The light indicates the retarder is active. It is for feedback only and does not signal a problem.

E4. Check Engine

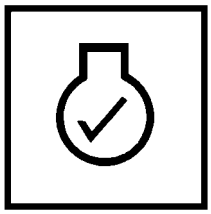

This amber check engine indicator will illuminate if a malfunction is detected by the engine electronic control system.

If this indicator illuminates, truck operation may continue, but maintenance personnel should be alerted as soon as possible.

A5. No Power

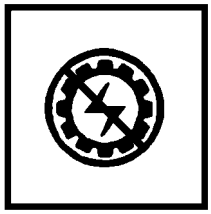

This red “no retard/no propel” indicator light indicates a fault has occurred which has eliminated the retarding and propulsion capability. A warning buzzer will also sound.

If this condition occurs, the operator should safely stop the truck, move selector switch to NEUTRAL, apply the parking brake, shutdown the engine, and notify maintenance personnel immediately.

B5. Propulsion System Warning

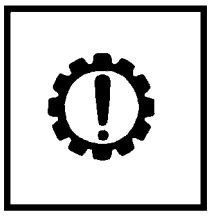

When this amber indicator is illuminated, the light indicates a “no propel” or “no retard” event may be about to occur. It is intended to provide advance notice of these events when possible. It does not require the operator to stop the truck, but may suggest that truck operation be appropriately modified, in case a red alarm does occur.

C5. Propulsion System Temperature

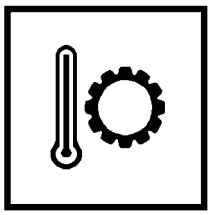

This amber AC drive system temperature warning light indicates the drive system temperature is above a certain level. When this condition occurs, the operator should consider modifying truck operation in order to reduce system temperature. The operator is not required to stop the truck at this time.

D5. High Hydraulic Brake Oil Temperature

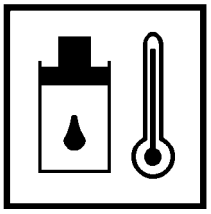

This red warning light indicates high oil temperature in the hydraulic tank. Several things occur before the red light illuminates:

- If the truck is moving, and the oil temperature exceeds 221° F (105° C), the minimum idle speed will be 1200 rpm (normally 1050).
- If the truck is moving, and the oil temperature goes above 230° F (110° C), the minimum idle speed will be 1700 rpm (normally 1050).
- If the truck is stopped, and the oil temperature goes above 212° F (100° C) the minimum idle speed will be 1000 rpm (normally 750).

NOTE: *Once the oil cools down to the normal operating range, the engine rpm will return to normal speed.*

- The red warning light will illuminate if the oil temperature rises above 248° F (120° C). Continued operation could damage components in the hydraulic system.

If this condition occurs, the operator should safely stop the truck, move selector switch to NEUTRAL, apply the parking brake, and operate engine at 1200 - 1500 rpm to reduce system temperature.

If temperature gauge (25, Figure 32-7) does not move into the green range after a few minutes and the red overhead indictor light does not go out, notify maintenance personnel immediately.

E5. Not Used

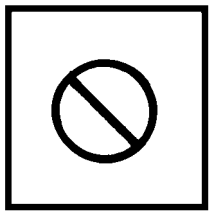

A6. No Propel

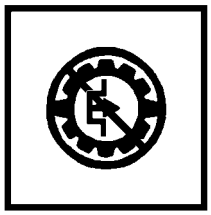

The red “no propel” light indicates a fault has occurred which has eliminated the propulsion capability. If this condition occurs, the operator should safely stop the truck, move selector switch to NEUTRAL, apply the parking brake, shutdown the engine, and notify maintenance personnel, immediately.

B6. Propel System @ Rest

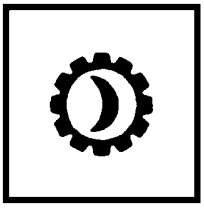

The amber “propel system @ rest” light is used to indicate that the AC drive system is de-energized and propulsion is not available. This light is activated when the instrument panel rest switch is turned ON and the AC drive system is de-energized. The three link energized lights (one on rear wall of operator cab, and two on the deck-mounted control cabinets) should NOT be illuminated at this time.

C6. Propel System Not Ready

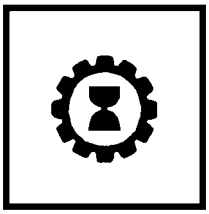

The amber indicator light functions during start-up much like the hourglass icon on a computer screen. This light indicates the computer is in the process of performing the self-diagnostics and set-up functions at start-up. Propulsion will not be available at this time.

D6. Reduced Propulsion

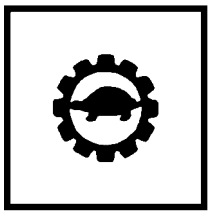

The amber “reduced propulsion” light is used to indicate that the full AC drive system performance in propulsion is not available. At this time, the only event that should activate this light is the use of “limp home mode”. This mode of operation requires a technician to enable.

E6. Retard At Continuous Level

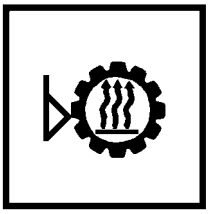

The amber “retard continuous” light indicates that the retarding effort is at the continuous level. The operator should control the speed of the truck in accordance to the "continuous" speeds on the GRADE/SPEED RETARD CHART on page 32-4.

Hazard Warning Lights

Hazard warning light switch (7, Figure 32-8) flashes all the turn signal lights. Pressing the bottom side of the rocker switch (toward the triangle) activates these lights. Pressing the top side of the rocker switch (toward the OFF symbol) turns these lights off.

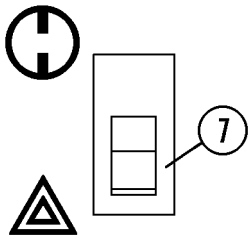

Lamp Test Switch

Lamp test switch (8, Figure 32-8) is provided to allow the operator to test the indicator lamps prior to starting the engine. To test the lamps and the warning horn, turn key switch (1, Figure 32-6) to the RUN position and press the bottom side of the rocker switch for the CHECK position. All lamps should illuminate except those which are for “optional” equipment that may not be installed. The warning horn should also sound. Any lamp bulbs which do not illuminate should be replaced before operating the truck. Releasing the spring-loaded switch will allow the switch to return to the OFF position.

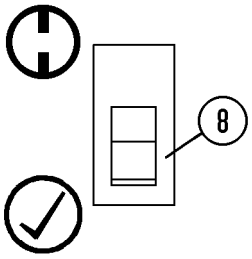

Link-On Warning Light

The link-on (or link-energized) indicator light is located next to the D.I.D. display panel behind the passenger seat. When illuminated, it indicates that the AC drive system is energized.

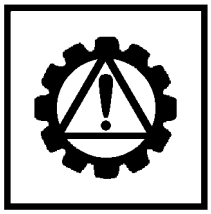

NOTE: *The D.I.D. display panel is for use by maintenance personnel* ***only****. It is located out of the operator's field of vision for that reason.*

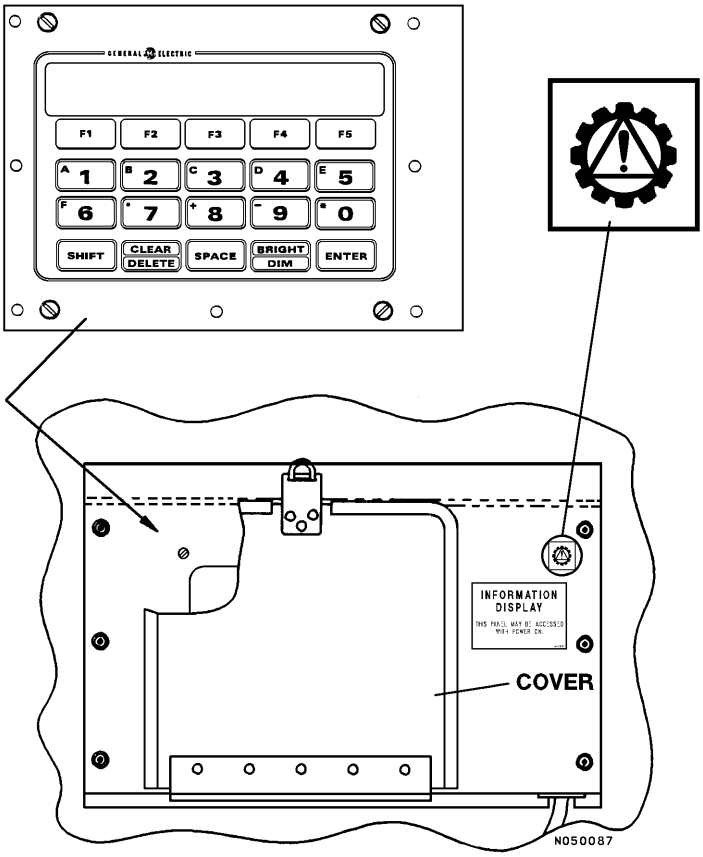

VEHICLE HEALTH MONITORING SYSTEM (VHMS)

Operation

This system uses the VHMS controller (6, Figure 32-9) to gather data about the operation of the truck from sensors and other controllers installed on the truck. The data stored in the VHMS controller is collected by a laptop personal computer (PC) or transmitted directly by communications satellite (utilizing the Orbcomm controller). This data is then compiled at the Komatsu computer server. Based on this information, the servicing Komatsu distributor will suggest improvements and provide information aimed at reducing machine repair costs and downtime.

When the data-store button is pressed on the back side of the center console, it will store a “snapshot” of the Statex III drive system. It will also trigger the VHMS system to store a “snapshot” of the truck operating system. A light (3, Figure 32-9) will stay illuminated while the VHMS system is recording the “snapshot”, which lasts for 7.5 minutes.

The VHMS system is turned ON by the truck keyswitch. Immediately after receiving 24V power from the keyswitch, the VHMS controller begins the power-up initialization sequence. This sequence takes about 3 seconds, during which time the red LED digits (3, Figure 32-11) display a circular sequence of flashing LED segments.

During normal truck operation, the red LED digits on the VHMS controller will count from 00-99 continuously.

When the keyswitch is turned OFF, the VHMS controller will remain ON while it finishes processing internal data and saves the recent data into permanent memory. When the data has been safely stored, the two digit LED display will turn OFF. This process could take up to three minutes to complete.

⚠WARNING

If 24V power is disconnected (using the battery disconnect switches) from the VHMS controller before it has completed it’s shut down procedure, the VHMS controller will lose all data gathered since the keyswitch was last turned ON. Do not disconnect battery power until the VHMS controller has completed the shutdown procedure and has turned the LED digits off.

The Orbcomm controller (1, Figure 32-9) transmits data through the antenna (1, Figure 32-10) mounted on top of the cab. The antenna coaxial cable is routed through a protective tube structure (2) to protect it from damage. If the antenna or coaxial cable is damaged, replace the parts.

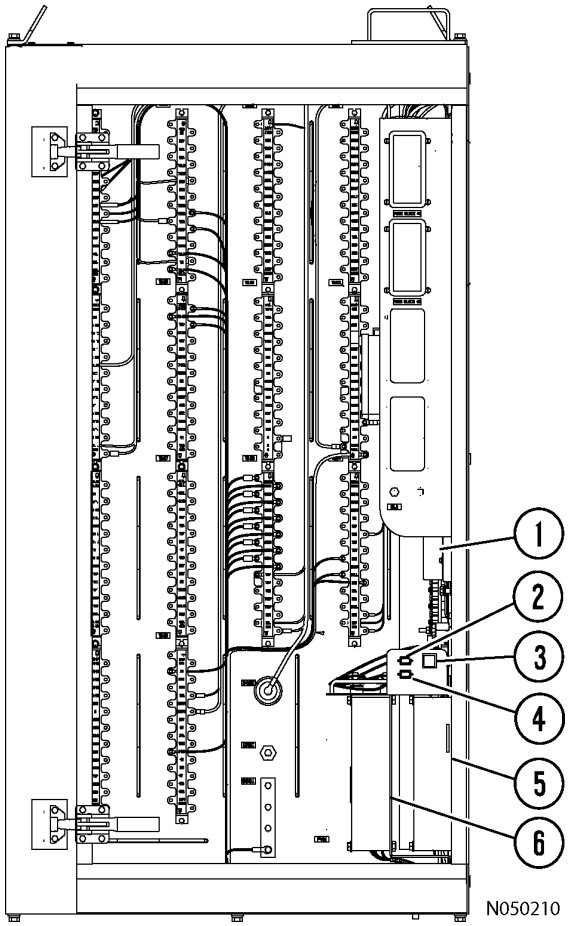

FIGURE 32-9. VHMS COMPONENT LOCATION

1. Orbcomm Controller
2. VHMS Download Port
3. Snapshot Light
4. IM-Diag Connector
5. Interface Module
6. VHMS Controller

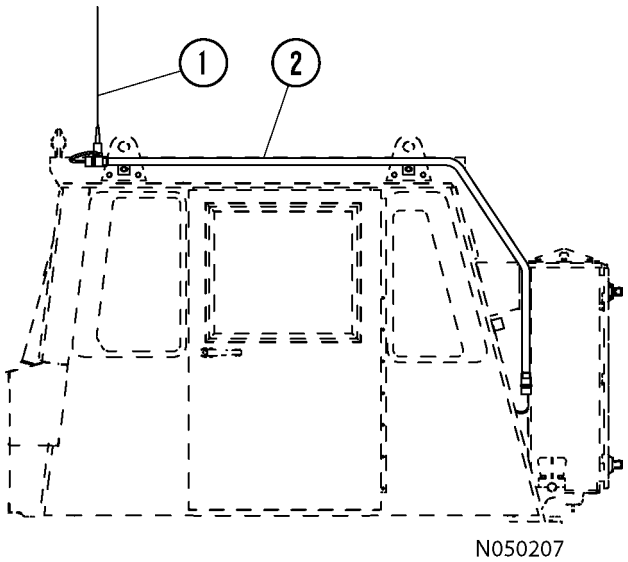

FIGURE 32-10. ORBCOMM ANTENNA

1. Orbcomm Antenna
2. Tube Structure

Interface Module

The interface module (5, Figure 32-9) receives data from the sensors installed on the truck and sends this information to the VHMS controller. There is a small green LED light on the face of the controller. With the key switch ON, the light should be blinking. If the light is continuously illuminated, there is a problem in the controller.

When a new interface module controller is installed on the truck, new software has to be installed inside the controller. The IM-Diag connector (4) is used to connect the interface module to a laptop PC for installing software.

Basic Precautions

When using this truck, there is no particular need to operate the VHMS system.

Never disassemble, repair, or modify the VHMS system. This may cause failure or fire on the machine or this system.

Do not touch the system when operating the machine.

Do not pull on the wiring harnesses, connectors. or sensors of this system. This may cause short circuits or disconnections that lead to failure or fire on the machine or this system.

Do not get water, dirt or oil on the system controllers.

If there is any abnormality with the VHMS system, please consult the servicing Komatsu distributor.

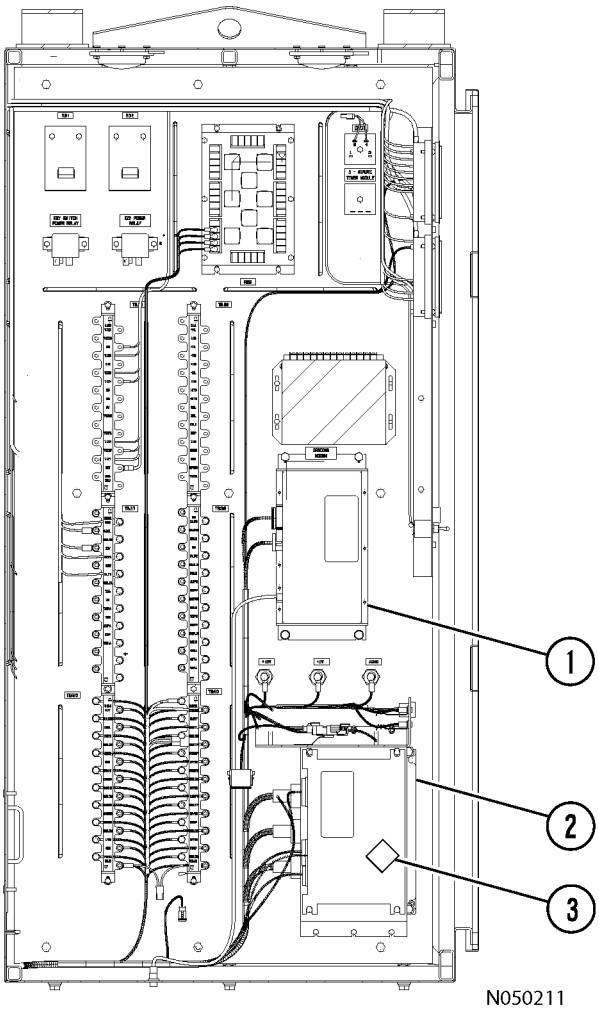

FIGURE 32-11. ORBCOMM LOCATION

1. Orbcomm Controller
2. VHMS Controller
3. LED Digits

FUSE BLOCKS				
	AMPS	DEVICES(S) PROTECTED	CIRCUIT	LOCATION
FB1-1	15	A/C, Heater Blower Motor	12H	Auxiliary Control Cabinet
FB1-2	10	Windshield Washer / Wiper	63	Auxiliary Control Cabinet
FB1-3	5	Fuel Gauge Engine Temp Gauge Volt Meter	712G	Auxiliary Control Cabinet
FB1-4	10	Key Switch Power	712P	Auxiliary Control Cabinet
FB1-5	10	Hoist Solenoid	712H	Auxiliary Control Cabinet
FB1-6	15	Turn / Clearance Lights	712T	Auxiliary Control Cabinet
FB1-7	10	Engine Options	712E	Auxiliary Control Cabinet
FB1-8	10	AID and Indicator Lights	12M	Auxiliary Control Cabinet
FB1-9	10	Engine Start Failure	712SF	Auxiliary Control Cabinet
FB1-10	10	Engine Shutters	712R	Auxiliary Control Cabinet
FB1-11	10	Dome Light Switch	712A	Auxiliary Control Cabinet
FB1-13	5	Gauge Voltage	15V	Auxiliary Control Cabinet
FB1-14	5	Pedal Voltage	15PV	Auxiliary Control Cabinet
FB1-15	5	Engine Interface	15VL	Auxiliary Control Cabinet
FB1-23	15	Cab Drive System Power	71P	Auxiliary Control Cabinet
FB1-24	10	Auto Lube Timer	68A	Auxiliary Control Cabinet
FB2-1	15	Dome, Fog, Ladder Lights	11SL	Auxiliary Control Cabinet
FB2-2	15	Service Lights	11L	Auxiliary Control Cabinet
FB2-13	10	Left Front Wheel	15LFWS	Auxiliary Control Cabinet
FB2-14	10	Right Front Wheel	15RFWS	Auxiliary Control Cabinet
FB2-17	10	12 V Power Plugs	67C	Auxiliary Control Cabinet
FB2-18	15	R.H. Window	67R	Auxiliary Control Cabinet
FB2-19	15	L.H. Window	67P	Auxiliary Control Cabinet

CIRCUIT BREAKERS				
	AMPS	DEVICES(S) PROTECTED	CIRCUIT	LOCATION
CB11	15	Backup Horn and Lights	79A	RB4, Auxiliary Control Cabinet
CB13	15	Clearance Lights	46	RB1, Auxiliary Control Cabinet
CB14	15	Turn Signal Flasher	11Z	RB1, Auxiliary Control Cabinet
CB15	15	Tail Lights	41T	RB1, Auxiliary Control Cabinet
CB16	15	Retard Lights	44D	RB3, Auxiliary Control Cabinet
CB17	15	Manual Back-Up Lights	47B	RB3, Auxiliary Control Cabinet
CB18	15	Stop Lights	44A	RB3, Auxiliary Control Cabinet
CB19	15	Backup Lights and Horn	79A	RB3, Auxiliary Control Cabinet
CB20	5	Engine Control Power	23D	RB4, Auxiliary Control Cabinet
CB21	15	Service Lights, Horn, Solenoid	11A	RB4, Auxiliary Control Cabinet
CB22	5	Engine Run Relay	439E	RB4, Auxiliary Control Cabinet
CB23	15	Headlights, Left Low Beam	11DL	RB5, Auxiliary Control Cabinet
CB24	15	Headlights, Right Low Beam	11DR	RB5, Auxiliary Control Cabinet
CB25	15	Headlights, Left High Beam	11HL	RB5, Auxiliary Control Cabinet
CB26	15	Headlights Right High Beam	11HR	RB5, Auxiliary Control Cabinet
CB27	15	Headlights and Dash Lights	11D	RB5, Auxiliary Control Cabinet

NOTES

LUBRICATION AND SERVICE

Recommended preventive maintenance will contribute to the long life and dependability of the truck and its components. The use of proper lubricants and the performance of checks and adjustments at the recommended intervals is most important.

Lubrication requirements are referenced to the lube key found in the Lubrication Chart (page 2-5). For detailed service requirements for specific components, refer to the service manual section for that component (i.e. Section H for suspensions, Section L for hydraulic system, etc.).

Refer to manufacturer's service manual when servicing any components of the General Electric system.

Refer to engine manufacturer's service manual when servicing the engine or any of its components.

The service intervals presented here are in hours of operation. **These intervals are recommended in lieu of an oil analysis program which may determine different intervals.** However, if the truck is being operated under extreme conditions, some or all, of the intervals may need to be shortened and the service performed more frequently.

The 930E truck is equipped with a Lincoln Automatic Lubrication System. The initial setup for this system provides for nominal amounts of lubricant to be delivered to each serviced point. The lubrication injectors can be adjusted to vary the amount of lubricant delivered. In addition, the timer for lubrication intervals is normally adjustable. For adjustments to these devices, refer to Automatic Lubrication System later in this manual.

930E SERVICE CAPACITIES

	Liters	U.S. Gallons
Crankcase: (including 4 oil filters) Komatsu SSDA16V160 Engine	280	74
Cooling System: Komatsu SSDA16V160 Engine	594	157
Hydraulic System: Refer to “Hydraulic Tank Service”	1325	350
Wheel Motor Gear Box (each side)	76	20
Fuel Tank (Diesel Fuel Only)	4542	1200

HYDRAULIC TANK SERVICE

There are two sight gauges on the side of the hydraulic tank. With engine stopped, keyswitch OFF, hydraulic system bled down and body down, oil should be visible in the top sight gauge. If hydraulic oil is not visible in the top sight gauge, follow Adding Oil instructions below.

Adding Oil

Keep the system open to the atmosphere only as long as absolutely necessary to lessen chances of system contamination.

Service the tank with clean Type C-4 hydraulic oil only. All oil being put into the hydraulic tank should be filtered through 3 micron filters.

1. With engine stopped, keyswitch OFF, hydraulic system bled down and body down, check to see that hydraulic oil is visible in the top sight gauge.
2. If hydraulic oil is not visible in the top sight gauge, remove the tank fill cap and add clean, filtered C-4 hydraulic oil (Lubrication Chart, Lube Key “B”) until oil is visible in the top sight gauge.
3. Replace fill cap.
4. Start engine. Raise and lower the dump body three times.
5. Repeat Steps 1 through 4 until oil is maintained in the top sight gauge with engine stopped, body down, and hydraulic system bled down.

WHEEL MOTOR SERVICE

Due to differences in gear ratio and component evolution/design, wheel motor service intervals may be unit number and/or mine specific. Because of the wide variety of factors involved, it is necessary to consult your area Komatsu representative for all wheel motor service intervals and instructions. General intervals for oil service and sampling are listed in the interval charts.

COOLANT LEVEL CHECK

Inspect the coolant sight gauge. If coolant cannot be seen in the sight gauge, it is necessary to add coolant to the system before truck operation. Refer to the procedure below for the proper filling procedure.

RADIATOR FILLING PROCEDURE

WARNING

Cooling system is pressurized due to thermal expansion of coolant. Do Not remove radiator cap while engine and coolant are hot. Severe burns may result.

1. With engine and coolant at ambient temperature, remove radiator cap.

Note: If coolant is added using the Wiggins quick fill system, the radiator cap MUST be removed prior to adding coolant.

2. Fill radiator with proper coolant mixture (as specified by the engine manufacturer) until coolant is visible in the sight gauge.
3. Install radiator cap.
4. Run engine for 5 minutes, check coolant level.
5. If coolant is not visible in the sight gauge, repeat Steps 1 - 4. Any excess coolant will be discharged through the vent hose after the engine reaches normal operating temperature.

Engine coolant must always be visible in the sight gauge before truck operation.

COOLING SYSTEM ANTI-FREEZE RECOMMENDATIONS (Ethylene Glycol Permanent Type Anti-Freeze)		
Percentage of Anti-Freeze	**Protection To:**	
10	+ 23° F	- 5° C
20	+ 16° F	- 9° C
25	+ 11° F	- 11° C
30	+ 4° F	- 16° C
35	- 3° F	- 19° C
40	- 12° F	- 24° C
45	- 23° F	- 30° C
50	- 34° F	- 36° C
55	- 48° F	- 44° C
60	- 62° F	- 52° C
Use only anti-freeze that is compatible with engine as specified by engine manufacturer.		

RESERVE ENGINE OIL SYSTEM (Optional)

The reserve oil tank for the engine is designed to add more oil capacity to the engine to reduce the frequent servicing of the engine oil. The engine oil level must still be checked every shift using the dipstick. If engine oil level is not correct, check for proper operation of reserve oil system. Never add oil to engine unless it has been drained.

If the engine oil has been drained from the oil pan, the new oil must be added to the engine oil pan before starting. Do Not use the oil in the reserve tank to fill an empty engine with oil. After an oil change, both engine and reserve tank must be full of oil before starting the engine.

Reserve Oil Tank Filling Procedure (Remote fill)

1. Connect the pressure supply hose from the new oil supply to the quick coupler on the truck. Open valve on supply hose to apply pressure.
2. Pull out on switch (2, Figure 2-1) to turn the system on.
3. Push start switch (3). The "VALVE OPEN" light (5) should illuminate and the filling process will begin.
4. When tank is full, the "VALVE OPEN" light will turn off and the “FULL” light (4) will illuminate.
5. Close the oil supply valve in the fill hose.
6. Press and hold start switch (3) for a couple of seconds.
7. Disconnect the new oil supply hose.
8. Push switch (2) in to turn system power OFF.

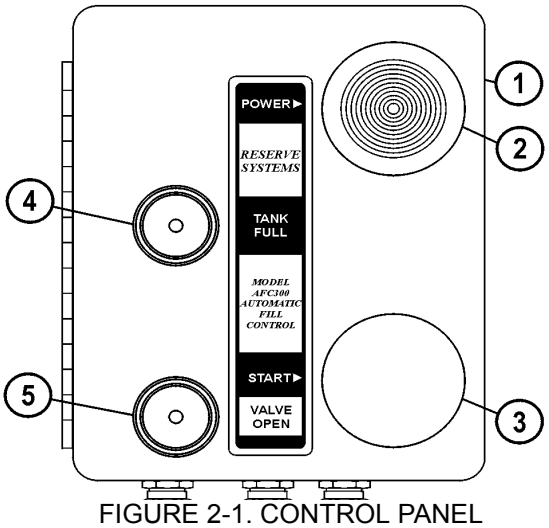

FIGURE 2-1. CONTROL PANEL

1. Remote Control Box
2. System Switch
3. Start Switch
4. “FULL” Light
5. “VALVE OPEN” Light

LUBRICATION CHART

LUBRICATION SPECIFICATIONS

LUBE KEY	TYPE LUBRICANT
A	ENGINE OIL - - - - - SEE ENGINE MANUAL
B	HYDRAULIC OIL - - - - - SAE 10W C - 4 - - - - - AUXILIARY HEATERS REQUIRED BELOW -10°F(-23°C)
C	HEAVY-DUTY SYNTHETIC GEAR OIL - - - - - SEE DRIVE SYSTEM MANUAL
D	MULTI - PURPOSE EXTREME PRESSURE GREASE - - - - - NLGI NO.2 (5% MIN. MOLY-DISULFIDE)
E	MULTI - PURPOSE GEAR OIL - - - - - SAE 80W - 90

SYM	DESCRIPTION	PTS	LUBE KEY	10 HR	50 HR	100 HR	250 HR	500 HR	1000 HR	2000 HR	2500 HR
1	CRANKCASE OIL LEVEL	1	A	CHECK							
2	ENGINE LUBE OIL FILTERS	SEE ENGINE MANUAL									
3	FUEL FILTER										
4	FUEL SEPERATOR (DAVCO)										
5	FUEL TANK	1					DRAIN H_2O & SEDIMENT				
6	GE PREFILTER BLOWER	1	D				GREASE				
7	FUEL TANK BREATHER	1							CLEAN		
8	HYDRAULIC OIL LEVEL	1	B	CHECK					*CHANGE		
9	HYDRAULIC STRAINER	2							CLEAN		
10	HYDRAULIC TANK BREATHER	2						CHANGE			
11	HYDRAULIC FILTERS	3			**	**	**	CHANGE			
12	MOTORIZED WHEEL OIL LEVEL	2	C	SEE DRIVE SYSTEM MANUAL							
13	HYD. PUMP DRIVE SHAFT	2	D				GREASE				
14	CHASSIS LUBE LEVEL	1	D				GREASE				
15	SEAT SLIDES & STEER SHAFT	4	D						GREASE		
16	WHEEL MOTOR BLOWER	2	D				GREASE				
17	FRONT WHEEL BEARINGS ***	2	E				CHECK				CHANGE
18	FRONT TRUNION	1	D						GREASE		
19	MAGNETIC PLUG FRONT WHL COVER ****	2					CHECK				

* 1000 HR INTERVAL CAN BE EXTENDED TO 2500 HR PROVIDED OIL SAMPLING AND ANALYSIS IS CONDUCTED EVERY 250 HR.
** ONE-TIME CHANGE AT 50, 100 AND 250 HR.
*** NOT APPLICABLE FOR 930E
**** APPLICABLE FOR 930E ONLY

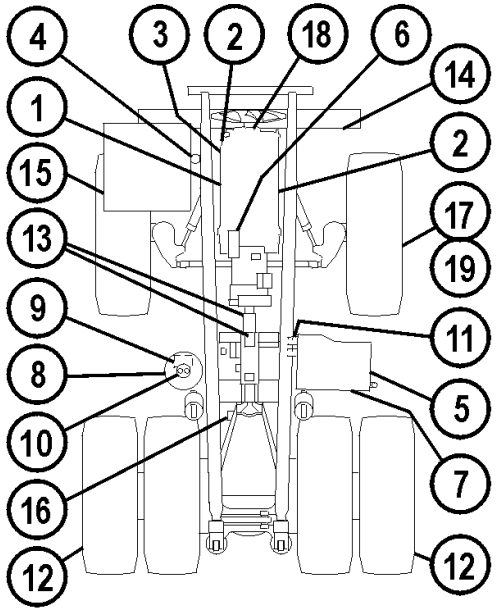

630E, 730E, 830E, & 930E

WB2790

LUBRICATION CHART

10 HOUR (DAILY) INSPECTION

Truck Serial Number_____ **Site Unit Number**_____ **Date**_____
Hourmeter_____ **Name of Service Technician**_____

	TASK	COMMENTS	CHECKED	INITIALS
1.	MACHINE - Inspect the entire machine for leaks, worn parts, and damage. Repair as necessary.			
2.	FAN DRIVE AND TURBOCHARGERS - Check for leaks, vibration or unusual noise. Check alternator and fan belt condition and alignment.			
3.	RADIATOR - Check the coolant level and fill with the proper mixture as shown in the Cooling System Recommendation Chart in this chapter. Refer to the engine manual for proper coolant additives.			
4.	ENGINE - a. Check the oil level on the dipstick. Refer to the engine manual for oil recommendations. (Lube Key “A”). *NOTE: If the truck is equipped with a reserve engine oil tank, the oil should be visible in the center (middle) sight gauge. If not, add oil to the reserve tank until oil is visible in the top sight gauge. Also, with the engine running, check operation of the LED indicator light. See below for description of LED light signals. Refer to Figure 2-1.* LED Light Signals: • Steady - Pump 1 is withdrawing oil from the engine sump and bringing down the oil level. • Regular pulsing - Pump 2 is returning oil to the engine sump and raising the oil level. • Irregular pulsing - Oil is at the correct running level. b. Inspect exhaust piping for security. c. Check for abnormal noises and fluid leaks. d. Eliminator Filter - Check operating indicator.			
5.	HYDRAULIC TANK - Check the oil level in the tank; add oil if necessary. Refer to Section L, Hydraulic Tank - Filling Instructions. Oil should be visible in the top sight glass. - Do Not overfill. Lube Key “B”.			
6.	WHEELS AND TIRES - a. Inspect tires for proper inflation and wear. b. Check for embedded debris in tread and remove. c. Inspect for damaged, loose, or missing wheel mounting nuts and studs.			
7.	COOLING AIR DUCTWORK - Inspect ductwork from the blower to the rear drive case. Ensure that ductwork is secure, free of damage, and unrestricted.			

10 HOUR (DAILY) INSPECTION (Continued)

Truck Serial Number_____ **Site Unit Number**_____ **Date**_____
Hourmeter_____ **Name of Service Technician**_____

	TASK	COMMENTS	CHECKED	INITIALS
8.	AIR INTAKE PIPING - Check all mounting hardware, joints, and connections. Ensure no air leaks exist and all hardware is properly tightened. Figure 2-2.			
9.	AIR CLEANERS - Check the air cleaner vacuum gauges in the operator cab, Figure 2-3. The air cleaner(s) should be serviced if the gauge(s) shows the following maximum restriction: Komatsu SSDA16V160 Engine: . . . . . 25 in. of H_2O vacuum. Refer to Section C in the service manual for servicing instructions for the air cleaner elements. Empty the air cleaner dust caps. *NOTE: After service, push the reset button on face of gauge to allow the gauge to return to zero.*			
10.	CAB AIR FILTER - Under normal operating conditions, clean every 250 hours. In extremely dusty conditions, service as frequently as required. Clean the filter element with mild soap and water. Rinse completely clean and air dry with a maximum of 40 psi (275 kPa). Reinstall the filter. Refer to Figure 2-4.			

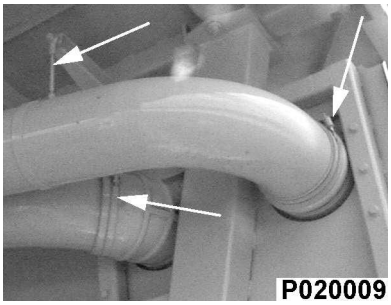

FIGURE 2-2.

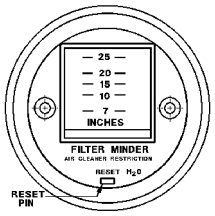

FIGURE 2-3.

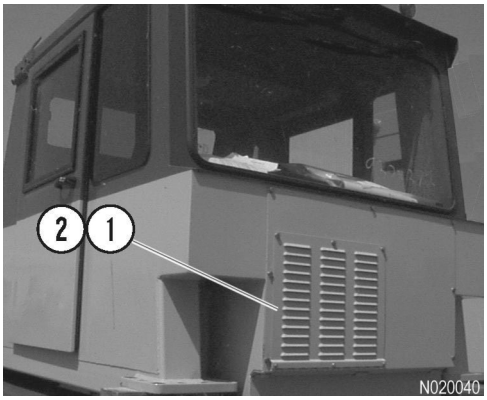

FIGURE 2-4.

1. Filter Cover 2. Cab Filter

10 HOUR (DAILY) INSPECTION (Continued)

Truck Serial Number_____ **Site Unit Number**_____ **Date**_____
Hourmeter_____ **Name of Service Technician**_____

	TASK	COMMENTS	CHECKED	INITIALS
11.	FUEL FILTERS (Fuel Separators) - Drain water from the bottom drain valve on each fuel separator.			
12.	AUTOMATIC LUBE SYSTEM - • Check the grease reservoir; fill as required. Lube Key “D”. • When filling the reservoir, check the grease filter indicator. Clean or replace the grease filter if the indicator detects a problem. • Inspect the system and check for proper operation. Be certain the following important areas are receiving adequate amounts of grease. Lube Key “D”. Steering Linkage Final Drive Pivot Pin - Rear Suspension Pin Joints - Upper & Lower Body Hinge Pins - Hoist Cylinders Pins - Upper & Lower Anti-sway Bar - Both Ends			

50 HOUR LUBRICATION AND MAINTENANCE CHECKS

Truck Serial Number_____ **Site Unit Number**_____ **Date**_____
Hourmeter_____ **Name of Service Technician**_____

	TASK	COMMENTS	CHECKED	INITIALS
*1.	FUEL FILTERS - Change the fuel filters, (fuel separators). Refer to engine manufacturer's maintenance manual for fuel filter replacement instructions.			
*2.	HYDRAULIC SYSTEM FILTERS - Replace filter elements only, after the initial 50, 100, and 250 hours of operation; then at each 500 hours of operation thereafter.			

*These checks are required **only after the initial hours of operation** (such as: the commissioning of a new truck, or after a new or rebuilt component installation).

100 HOUR LUBRICATION AND MAINTENANCE CHECKS

Truck Serial Number_____ **Site Unit Number**_____ **Date**_____
Hourmeter_____ **Name of Service Technician**_____

	TASK	COMMENTS	CHECKED	INITIALS
*1.	HYDRAULIC SYSTEM FILTERS - Replace filter elements only, after the **initial** 100 and 250 hours of operation; then at each 500 hours of operation thereafter.			

*These checks are required **only after the initial hours of operation** (such as: the commissioning of a new truck, or after a new or rebuilt component installation), check:

250 HOUR LUBRICATION AND MAINTENANCE CHECKS

The 10 hour lubrication and maintenance checks should also be performed at this time.

NOTE: "Lube Key" references are to the Lubrication Chart.

Truck Serial Number_____ **Site Unit Number**_____ **Date**_____
Hourmeter_____ **Name of Service Technician**_____

	TASK	COMMENTS	CHECKED	INITIALS
1.	ENGINE - **Refer to engine Operation & Maintenance manual** for complete specifications regarding engine lube oil specifications. *NOTE: If the engine is equipped with the *Centinel™ oil system and/or the Eliminator™ filter system, engine oil and filter change intervals are extended beyond 250 hours. Refer to Cummins Operation & Maintenance manual for specific oil and filter change intervals.* * The Centinel™ system is a duty-cycle-dependent lubrication management system whereby oil is blended with the fuel and burned and an extension of oil change intervals can occur. a. Change engine oil. Lube Key "A". b. Replace engine oil filters. *NOTE: When installing spin-on filter elements, follow the instructions as specified by the filter manufacturer. The tightening instructions are normally printed on the outside of the filter.* ***Do not use a wrench or strap to tighten filter elements****.* c. If the truck is equipped with a reserve engine oil tank, change the reserve tank oil filter. d. Check belt tension and condition of each accessory belt. Refer to Cummins Operation & Maintenance manual for specific adjustment instructions. e. Check the torque on the mounting capscrews on cooling fan (1, Figure 2-5). Tighten eight capscrews (2) to **175 ft.lbs. (237 Nm)**.			
2.	COOLING SYSTEM - a. COOLANT MIXTURE - Check for proper coolant mixture. Add coolant as required. b. COOLANT FILTERS - Change coolant filters. c. COOLING SYSTEM HOSES - Check cooling system hoses for damage and signs of deterioration. Refer to the engine maintenance manual for coolant filter replacement instructions and proper coolant mixture instructions.			

(CONTINUED NEXT PAGE)

250 HOUR LUBRICATION AND MAINTENANCE (Continued)

	TASK	COMMENTS	CHECKED	INITIALS
3.	FUEL FILTERS - Change the fuel filters (fuel separators). Refer to Cummins Operation & Maintenance manual for specific filter replacement instructions.			
4.	FUEL TANK - Drain water and sediment from the fuel tank. Refer to Section B, Fuel Tank - Cleaning.			
5.	STEERING LINKAGE - Check the torque on pin retaining nuts (1, Figure 2-6) on the steering linkage. (**525 ft.lbs. (712 N.m)** Check the torque on tie rod retaining nuts (2). (**310 ft.lbs. (420 N.m)**			
6.	HYDRAULIC PUMP DRIVESHAFT & U-JOINTS - Add one or two applications of grease to each grease fitting. Check that each bearing of the cross & bearing assembly is receiving grease. Lube Key “D”. Replace bearings if any wear is detected.			
7.	REAR WHEEL MOUNTING - Using a mirror on a long rod and a flashlight, inspect all inner and outer wheel mounting nuts/studs for any evidence of looseness, damage, or missing hardware. If wheel mounting nuts/studs must be secured or replaced, the outer wheel must be removed for access. Refer to the Shop manual, Section G, for these procedures.			

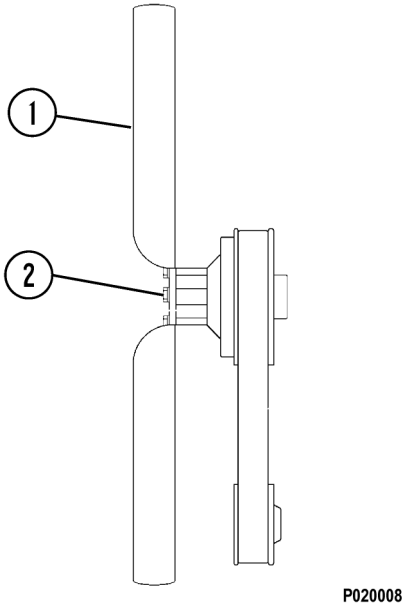

FIGURE 2-5.

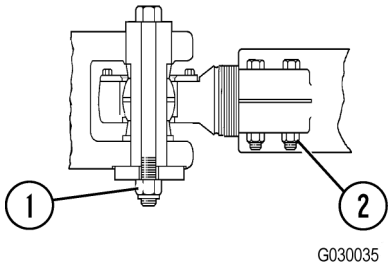

FIGURE 2-6.

250 HOUR LUBRICATION AND MAINTENANCE (Continued)

	TASK	COMMENTS	CHECKED	INITIALS
8.	REAR AXLE HOUSING - Check the rear axle housing for fluid leaks by removing the two drain plugs on the bottom of the axle housing. If fluid is present, the cause must be found and corrected before releasing the truck to operation.			
9.	MAGNETIC PLUG - Remove the magnetic plugs from the front wheel hub covers and inspect for debris. Clean the plugs and perform any necessary repairs. Refer to Figure 2-7.			
10.	MOTORIZED WHEELS - Check for the correct oil level. Rotate a magnetic plug to the 6 o'clock position and remove the plug. The oil level should be even with the bottom of the plug opening. Inspect the magnetic plugs for ferrous materials. Service the wheel motor as necessary. Refer to Figure 2-8.			
11.	WHEEL MOTOR OIL SAMPLING - Refer to Section G5, Wheel Motor, for oil sampling information.			
*12.	HYDRAULIC SYSTEM FILTERS - Replace filter elements only after the **initial 250** hours of operation; then at each 500 hours of operation thereafter. Check oil level. Add oil as necessary. Lube Key "B".			
13.	BATTERIES - Check the electrolyte level and add water if necessary.			
14.	BODY-UP & HOIST LIMIT SWITCHES - Check operation of the switches. Clean the sensing areas of any dirt accumulation and inspect the wiring for any signs of damage.			

*This check is required **only after the first 250 hours of operation** (such as: the commissioning of a new truck, or after a new or rebuilt component installation), check:

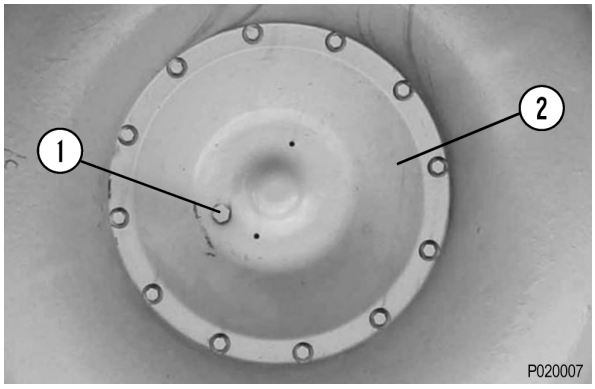

FIGURE 2-7.

1. Magnetic Plug 2. Cover

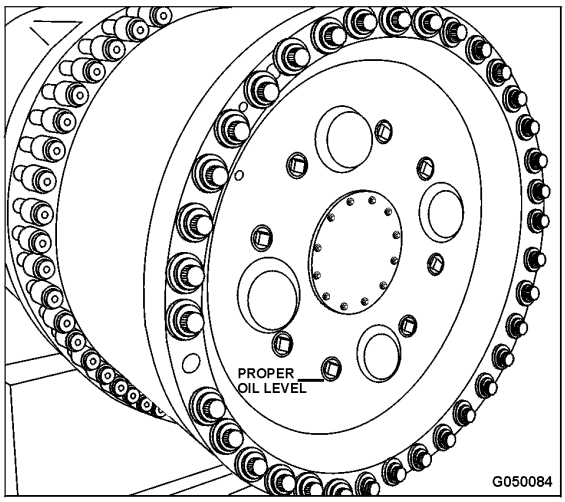

FIGURE 2-8.

500 HOUR LUBRICATION AND MAINTENANCE CHECKS

Maintenance requirements for every 10 & 250 hour Lubrication and Maintenance Checks should also be carried out at this time.

NOTE: "Lube Key" references are to the Lubrication Chart.

Truck Serial Number_____ **Site Unit Number**_____ **Date**_____
Hourmeter_____ **Name of Service Technician**_____

	TASK	COMMENTS	CHECKED	INITIALS
1.	FINAL DRIVE CASE BREATHERS - Remove the breather elements for the motorized wheels. Clean or replace the elements.			
2.	HYDRAULIC SYSTEM FILTERS - Replace the tank breathers and high pressure filter elements. Check the oil level. Add oil as necessary. Lube Key "B".			
3.	HYDRAIR® SUSPENSION - Check for proper piston extension (front and rear).			
4.	THROTTLE AND BRAKE PEDAL - Lubricate the treadle roller and hinge pins with lubricating oil. Lift the boot from the mounting plate and apply a few drops of lubricating oil between the mounting plate and the plunger.			
5.	HOIST ACTUATOR LINKAGE - Check operation. Clean, lubricate, and adjust as necessary.			
6.	PARKING BRAKE - Refer to Section J, Parking Brake Maintenance. Perform the recommended inspections.			
7.	RESERVE ENGINE OIL SYSTEM (OPTIONAL) a. Check electrical system connections for tightness, corrosion and physical damage. Check the battery, oil pressure switch, junction boxes, remote control fill box and the circuit breakers. b. Examine all electrical cables over their entire length for possible damage. c. Examine all hoses, including those on the reserve tank and the ones leading to and from the engine. Check for leaks, cracks or other damage. Check all fittings for tightness, leakage or damage.			
8.	BLADDER ACCUMULATORS - Precharge pressure must be checked every 500 hours. Failure to maintain correct precharge pressure may result in bladder failures.			
9.	WHEEL MOTOR OIL - Change or filter wheel motor gear oil. The oil must be filtered/changed prior to 500 hours if oil analysis indicates contaminated oil.			
10.	VHMS DATA DOWNLOAD - Using a laptop PC with the *VHMS Technical Analysis Tool Box* program, perform a data download from the VHMS controller. Send the data to WebCARE using the FTP feature. Refer to Section D in the applicable shop manual for more detailed instructions.			

1000 HOURS LUBRICATION AND MAINTENANCE CHECKS

Maintenance for every 10, 250, & 500 hour Lubrication and Maintenance Checks should be performed at this time.

NOTE: "Lube Key" references are to the Lubrication Chart.

Truck Serial Number_____ **Site Unit Number**_____ **Date**_____
Hourmeter_____ **Name of Service Technician**_____

	TASK	COMMENTS	CHECKED	INITIALS
1.	HYDRAULIC TANK - Drain the hydraulic tank and clean the inlet strainer. Refill the tank with oil; approximate capacity 250 gal. (947 l). Use Lube Key "B".			
2.	RADIATOR - Clean the cooling system with a quality cleaning compound. Flush with water. Refill the system with anti-freeze and water solution. Check the Cooling System Recommendation Chart in this section for the correct mixture. Refer to the Cummin's Operation and Maintenance Manual for the correct additive mixture.			
3.	FUEL TANK - Remove the breather and clean in solvent. Dry with pressurized air and reinstall.			
4.	OPERATOR'S SEAT - Apply grease to the slide rails. Lube Key "D".			
5.	AUTOMATIC BRAKE APPLICATION - Ensure the brakes are automatically applied when brake pressure decreases below the specified limit. Refer to Section J, Brake Check-out Procedure.			

5000 HOUR MAINTENANCE CHECKS

Maintenance for every 10, 250, 500 & 1,000 hour Lubrication and Maintenance Checks should be performed at this time.

NOTE: "Lube Key" references are to the Lubrication Chart.

Truck Serial Number_____ **Site Unit Number**_____ **Date**_____
Hourmeter_____ **Name of Service Technician**_____

TASK	COMMENTS	CHECKED	INITIALS
AIR CLEANERS - Clean the Donaclone tubes in the pre-cleaner section of the air filter. Use low pressure cold water or low pressure air to clean the tubes. Refer to Section C, Air Cleaners. *NOTE: Do not use a hot pressure washer or high pressure air to clean the tubes. Hot water/high pressure causes the pre-cleaner tubes to distort.*			

AUTOMATIC LUBRICATION SYSTEM

GENERAL DESCRIPTION

The Lincoln Automatic Lubrication System is a pressurized lubricant delivery system which delivers a controlled amount of lubricant to designated lube points. The system is controlled by an electronic timer which signals a solenoid valve to operate a hydraulic motor powered grease pump. Hydraulic oil for pump operation is supplied by the steering circuit.

Grease output is proportional to the hydraulic motor input flow. A pump control manifold, mounted on top of the hydraulic motor, controls input flow and pressure. A 24VDC solenoid mounted on the manifold turns the pump on and off.

NOTE: Newer models are equipped with fixed hydraulic motor controls.

The pump is driven by the rotary motion of the hydraulic motor, which is then converted to reciprocating motion through an eccentric crank mechanism. The reciprocating action causes the pump cylinder to move up and down. The pump is a positive displacement, double-acting type as grease output occurs on both the up and the down stroke.

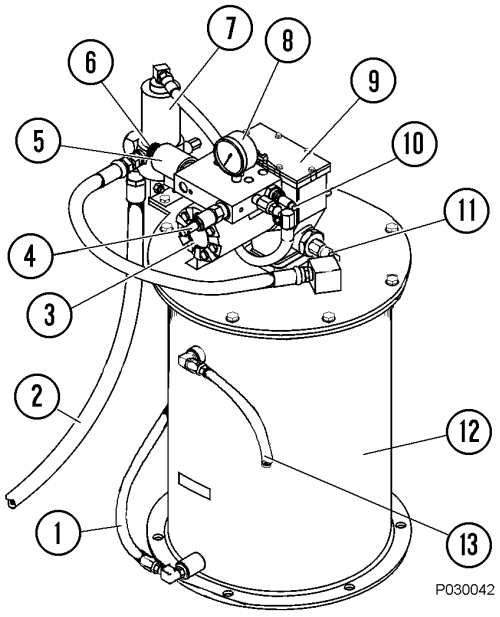

FIGURE 42-1. PUMP/RESERVOIR COMPONENTS

1. Hose From Filter
2. Outlet to Injectors
3. Hydraulic Motor
4. *Pressure Reducing Valve
5. Solenoid Valve
6. Manual Override Switch
7. Vent Valve
8. Pressure Gauge
9. Pump Assembly
10. *Flow Control Valve
11. Pressure Switch
12. Grease Reservoir
13. Vent Hose

**Newer models are equipped with fixed motor controls.*

During the down stroke, the pump cylinder is extended into the grease. Through the combination of shovel action and vacuum generated in the pump cylinder chamber, the grease is forced into the pump cylinder. Simultaneously, grease is discharged through the outlet of the pump. The volume of grease during intake is twice the amount of grease output during one cycle. During the upstroke, the inlet check valve closes, and one half the grease taken in during the previous stroke is transferred through the outlet check and discharged to the outlet port.

⚠WARNING

Over-pressurizing the system, modifying parts, using incompatible chemicals and fluids, or using worn or damaged parts may result in equipment damage and/or serious personal injury.

- ***DO NOT exceed the stated maximum working pressure of the pump or the lowest rated component in the system.***
- ***DO NOT alter or modify any part of this system unless approved by factory authorization.***
- ***DO NOT attempt to repair or disassemble the equipment while the system is pressurized.***
- ***Make sure all fluid connections are securely tightened before using this equipment.***
- ***Always read and follow the fluid manufacturer's recommendations regarding fluid compatibility and the use of protective clothing and equipment.***
- ***Check all equipment regularly. Repair or replace worn or damaged parts immediately.***

This equipment generates very high grease pressure. Extreme caution should be used when operating this equipment. Material leaks from loose or ruptured components can inject fluid through the skin and into the body, causing serious bodily injury including possible need for amputation. Adequate protection is recommended to prevent splashing of material onto the skin or into the eyes.

If any fluid appears to penetrate the skin, get emergency medical care immediately! Do not treat as a simple cut. Tell the attending physician exactly what fluid was injected.

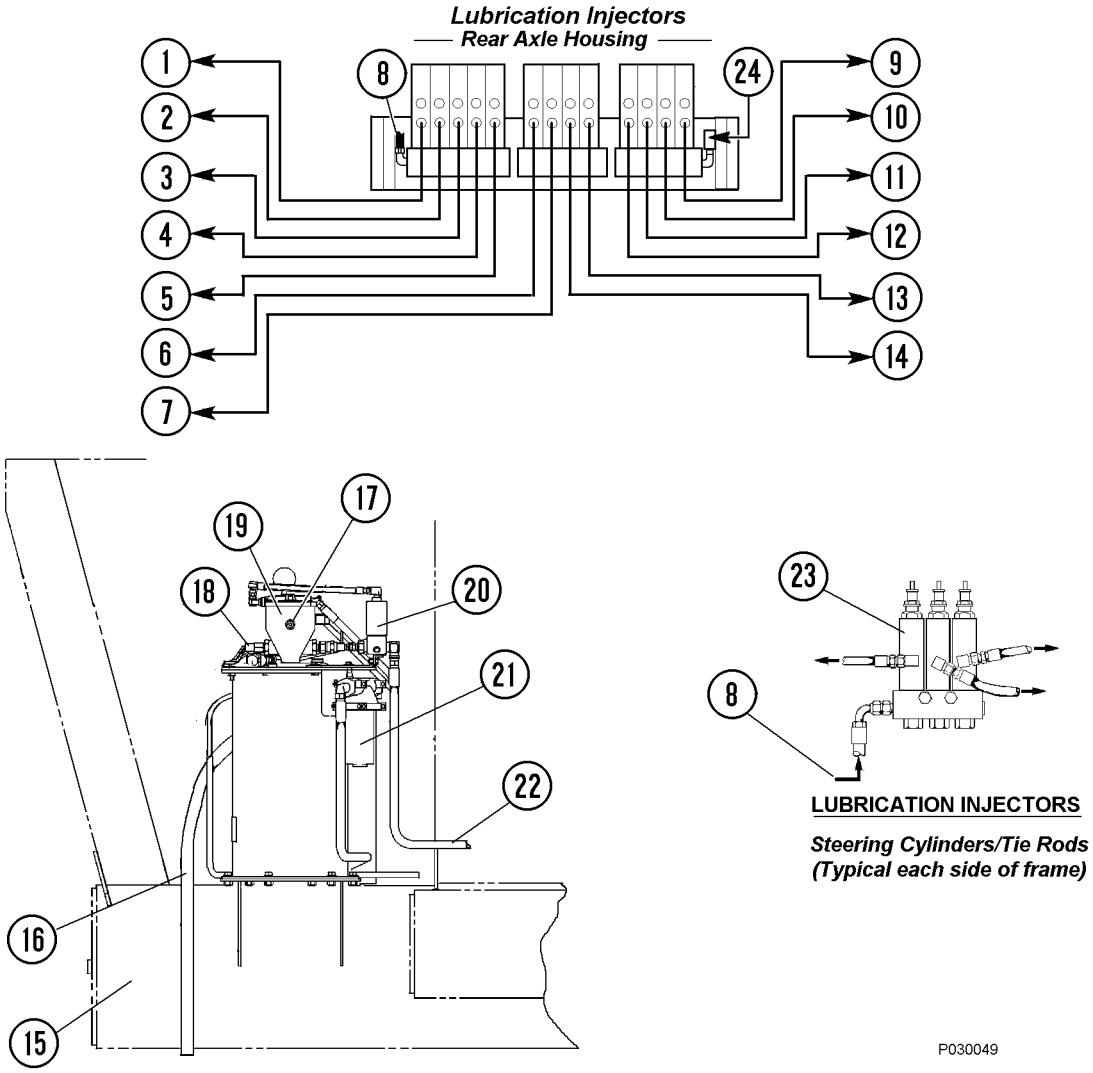

FIGURE 42-2. AUTOMATIC LUBRICATION SYSTEM INSTALLATION

NOTE: The above illustration shows the standard location for the lube pump and reservoir (right platform). This assembly may be located on the left platform on some models.

1. L.H. Suspension, Top Bearing
2. L.H. Suspension, Bottom Bearing
3. L.H. Body Pivot Pin
4. L.H. Hoist Cylinder, Top Bearing
5. L.H. Hoist Cylinder, Bottom Bearing
6. L.H. Anti-Sway Bar Bearing
7. Rear Axle Pivot Pin
8. Grease Supply From Pump
9. R.H. Suspension, Top Bearing
10. R.H. Suspension, Bottom Bearing
11. R.H. Body Pivot Pin
12. R.H. Hoist Cylinder, Top Bearing
13. R.H. Hoist Cylinder, Bottom Bearing
14. R.H. Anti-Sway Bar Bearing
15. Truck Frame
16. Vent Hose
17. Oil Level Plug
18. Pressure Switch (N.O.) - 2500 psi (17,237 kPa)
19. Grease Pump
20. Vent Valve
21. Filter
22. Grease Supply to Injectors
23. Injector
24. Pressure Switch (N.O.) - 2000 psi (13,790 kPa)

SYSTEM COMPONENTS

Filter

Filter assembly (21, Figure 42-2), mounted on the grease reservoir, filters the grease prior to refilling the reservoir from the shop supply. A bypass indicator alerts service personnel when the filter requires replacement.

Hydraulic Motor and Pump

The rotary hydraulic motor and pump (3 & 9, Figure 42-1) is a fully hydraulically operated grease pump. An integrated pump control manifold is incorporated with the motor to control input flow and pressure.

NOTE: The pump crankcase oil level must be maintained to the level of the pipe plug (17, Figure 42-2). If necessary, refill with 10W-30 motor oil.

WARNING

Hydraulic oil supply inlet pressure must not exceed 3000 psi (20 685 kPa). Exceeding the rated pressure may result in damage to the system components and personal injury.

Grease Reservoir

Grease reservoir (12, Figure 42-1) has a capacity of 90 lbs. (41 kg). When the grease supply is replenished by filling the system at the service center, the grease passes through a filter to remove contaminants before it flows into the reservoir.

Pressure Reducing Valve

Pressure reducing valve (4, Figure 42-1), located on the manifold, reduces the hydraulic supply pressure (from the steering circuit) to a suitable operating pressure of 325 to 350 psi (2240 to 2415 kPa) for the hydraulic motor used to drive the lubricant pump.

NOTE: Newer models are equipped with non-adjustable pressure reducing valves.

Flow Control Valve

Flow control valve (10, Figure 42-1), mounted on the manifold, controls the amount of oil flow to the hydraulic motor at 2.5 GPM (9.5 L/min.).

NOTE: Newer models are equipped with non-adjustable flow control valves.

Solenoid Valve

Solenoid valve (5, Figure 42-1), when energized, allows oil to flow to the hydraulic motor.

Vent Valve

With vent valve (7, Figure 42-1) closed, the pump continues to operate until maximum grease pressure is achieved. As this occurs, the vent valve opens and allows the grease pressure to drop to 0, so the injectors can recharge for their next output cycle.

Lubrication Cycle Timer

The solid state lubrication cycle timer (1, Figure 42-4) provides a 24 VDC timed-interval signal to energize solenoid valve (5, Figure 42-1), providing oil flow to operate the grease pump motor. This timer is mounted in the electrical interface cabinet.

Time Delay Module

Time delay module (7, Figure 42-4), located in the electrical interface cabinet, provides a one minute delay in the low pressure warning lamp circuit to allow a normally operating system to attain full grease system pressure without activating the warning lamp. If the system fails to reach 2000 psi (13,789 kPa) within this time period, the timer will apply 24VDC to several relays which will illuminate the low pressure warning lamp in the overhead display. An external 604K ohm resistor determines the delay period.

Pump Cutoff Pressure Switch (N.O.) - 2500 psi (17,237 kPa)

Pump cutoff pressure switch (11, Figure 42-1) de-energizes the pump solenoid relay when the grease line pressure reaches the switch pressure setting, turning off the motor and pump.

Grease Pressure Failure Switch (N.O.) - 2000 psi (13,789 kPa)

Grease pressure failure switch (24, Figure 42-2) monitors grease pressure in the injector bank on the rear axle housing. If the proper pressure is not sensed within 60 seconds (switch contacts do not close), several relays energize, actuating a warning lamp circuit to notify the operator a problem exists in the lube system.

Pressure Gauge

Pressure gauge (8, Figure 42-1) monitors hydraulic oil pressure to the inlet of the hydraulic motor.

Injectors

Each injector (23, Figure 42-2) delivers a controlled amount of pressurized lubricant to a designated lube point. Refer to Figure 42-2 for locations.

SYSTEM OPERATION

Normal Operation

1. During truck operation, lubrication cycle timer (1, Figure 42-4) will energize the system at a preset time interval.
2. The timer provides 24 VDC through normally closed relay RB7K5 (12). This relay is used to energize pump solenoid valve (5), allowing hydraulic oil provided by the steering pump circuit to flow to the pump motor and initiate a pumping cycle.
3. Pressure reducing valve (4, Figure 42-3) reduces hydraulic oil pressure from the steering circuit to 325 to 350 psi (2240 to 2413 kPa) before entering the motor. Also, the amount of oil supplied to the pump is limited by flow control valve (6). Pump pressure can be read using gauge (5) mounted on the manifold.
4. With oil flowing into the hydraulic motor, the grease pump will operate, pumping grease from the reservoir through check valve (10), vent valve (11), and then to injectors (13).
5. During this period, the injectors will meter the appropriate amount of grease to each lubrication point.
6. When 2500 psi (17,237 kPa) grease pressure reaches pressure switch (4, Figure 42-4) setting, the switch contacts will close and energize the relay RB7K5, removing power from the hydraulic motor/pump solenoid and the pump will stop. The relay will remain energized until grease pressure drops and the pressure switch opens again or until the timer turns off.
7. After the pump solenoid valve is de-energized, hydraulic pressure in the manifold drops and the vent valve will open, releasing grease pressure in the lines to the injector banks. When this occurs, the injectors are then able to recharge for the next lubrication cycle.
8. The system will remain at rest until the lubrication cycle timer turns on and initiates a new grease cycle.

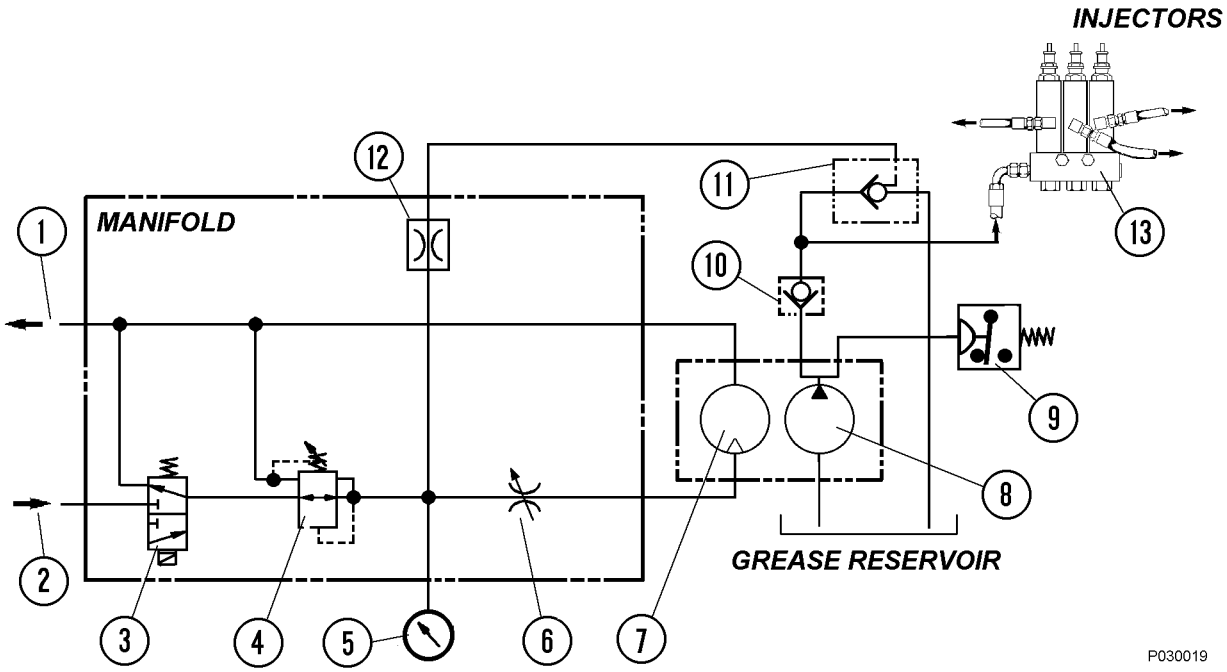

FIGURE 42-3. HYDRAULIC SCHEMATIC

1. Hydraulic Oil Return
2. Hydraulic Oil Supply
3. Pump Solenoid Valve
4. Pressure Reducing Valve
5. Motor Pressure Gauge
6. Flow Control Valve
7. Hydraulic Motor
8. Grease Pump
9. Pressure Switch (N.O.)
10. Check Valve
11. Vent Valve
12. Orifice
13. Injector Bank

Pressure Failure Detection Circuits

1. When the lubrication cycle is initiated, 24VDC flows through normally closed relay RB7K1 (8, Figure 42-4) and connects to one-minute delay timer (7).
2. If the system is operating normally, grease pressure at the rear axle injector bank will rise to pressure switch (9) setting of 2000 psi (13,789 kPa) and energize relay RB7K1 (8), removing the 24VDC from the delay timer.
3. If a problem occurs and the system is not able to attain 2000 psi (13,789 kPa), delay timer (11) will energize relay RB7K4 (10) after 60 seconds, turning on the low lube system pressure warning lamp on the overhead display. After RB7K4 relay energizes, it will energize relay RB7K3 (6).
4. Once RB7K3 is energized, it will latch and remain energized as long as the key switch is on. RB7K4 will also remain energized, and the low lube pressure warning lamp will remain on to notify the operator that a problem exists and the system requires service.

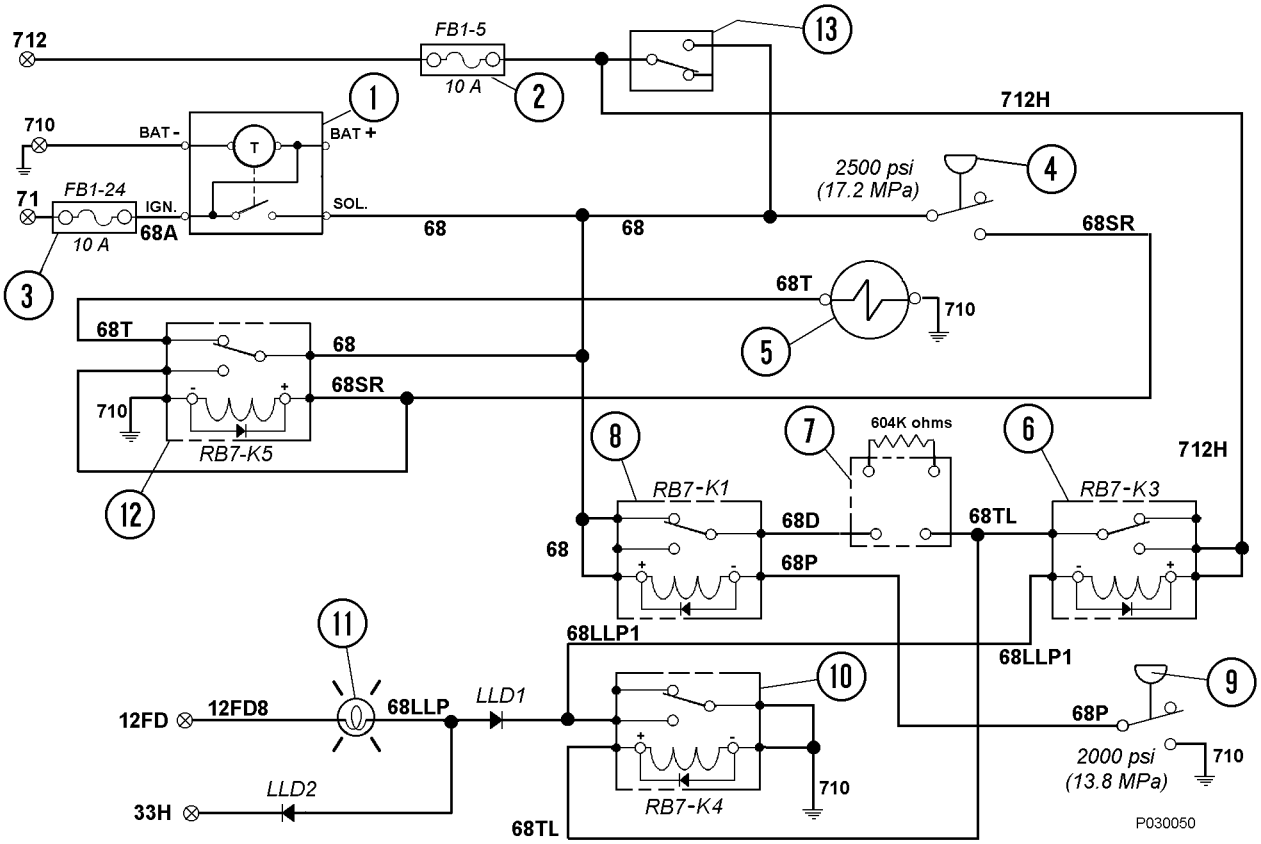

FIGURE 42-4. ELECTRICAL SCHEMATIC

1. Lubrication Cycle Timer
2. Fuse FB1-5 (In Electrical Interface Cabinet)
3. Fuse FB1-24 (In Electrical Interface Cabinet)
4. Pressure Switch (N.O.) - 2500 psi (17,237 kPa)
5. Grease Pump Motor Solenoid
6. Relay K3 (On Relay Board RB7)
7. Time Delay Module
8. Relay K1 (On Relay Board RB7)
9. Pressure Switch (N.O.) - 2000 psi (13,789 kPa)
10. Relay K4 (On Relay Board RB7)
11. Low Grease Pressure Warning Lamp (On Overhead Display Panel)
12. Relay K5 (On Relay Board RB7)
13. Manual Test Switch, Optional (at grease reservoir)

GENERAL INSTRUCTIONS

Required Lubricant For System

Grease requirements will depend on ambient temperatures encountered during truck operation:

- Above 90°F (32°C) - Use NLGI No. 2 multipurpose grease (MPG).
- -25° to 90°F (-32° to 32°C) - Use NLGI No. 1 multipurpose grease (MPG).
- Below -25°F (-32°C) - Refer to local supplier for extreme cold weather lubricant requirements.

System Priming

The system must be full of grease and free of air pockets to function properly. After maintenance, if the primary or secondary lubrication lines were replaced, it will be necessary to reprime the system to eject all entrapped air.

1. Fill the grease reservoir with lubricant, if necessary.
2. To purge air from the main supply line, remove the main supply line at the grease canister and connect an external grease supply to the line.
3. Remove the plugs from each injector group in sequence (right front, left front, and rear axle).
4. Using the external grease source, pump grease until grease appears at the group of injectors. Then re-install the pipe plug. Repeat for the remaining injector groups.
5. Remove the caps from each injector and connect an external grease supply to the zerk on the injector. Pump until grease appears at the far end of the individual grease hose or the joint being greased.

Filter Assembly

Filter assembly element (5, Figure 42-5) should be replaced if bypass indicator (2) shows excessive element restriction.

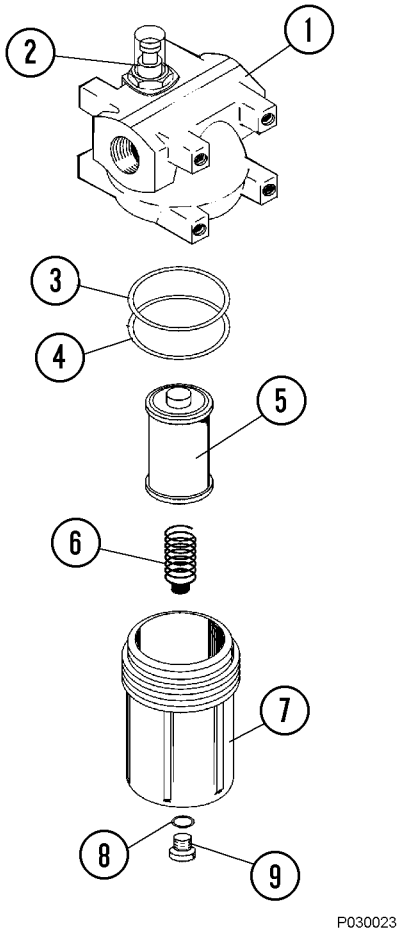

FIGURE 42-5. FILTER ASSEMBLY

1. Housing
2. Bypass Indicator
3. O-Ring
4. Backup Ring
5. Element
6. Spring
7. Bowl
8. O-Ring
9. Plug

LUBRICANT PUMP

Pump Housing Oil Level

The pump housing must be filled to the proper level with SAE 10W-30 motor oil. The oil level should be checked at every 1000 hour interval. To add oil, remove pipe plug (4, Figure 42-6) and fill the housing to the bottom of the plug hole.

Pump Pressure Control

High pressure hydraulic oil from the steering system is reduced to 325 to 350 psi (2240 to 2413 kPa) by the pressure reducing valve located on the manifold on top of the pump motor. This pressure can be read on the gauge installed on the manifold and should be checked occasionally to verify that the pressure is within the above limits.

Pressure Control Valve Adjustment

NOTE: Newer models are equipped with non-adjustable pressure reducing valves.

1. With the truck engine running, activate the lube system manual test switch to start the hydraulic motor and pump.
2. Loosen the locknut on pump pressure control (1, Figure 42-6) by turning the nut counterclockwise.
3. Turn the valve stem counterclockwise until it no longer turns. The valve stem will unscrew until it reaches the stop. It will not come off.

   This is the minimum pressure setting of approx-imaetly 170 psi (1172 kPa).
4. With the pump stalled against the pressure, turn the pressure control valve stem clockwise until 325 to 350 psi (2240 to 2413 kPa) is attained on manifold pressure gauge (3).
5. Tighten the locknut to lock the stem in position.

NOTE: Flow control valve (5) is factory adjusted to 2.5 GPM (9.5 L/min.). DO NOT tamper with this setting.

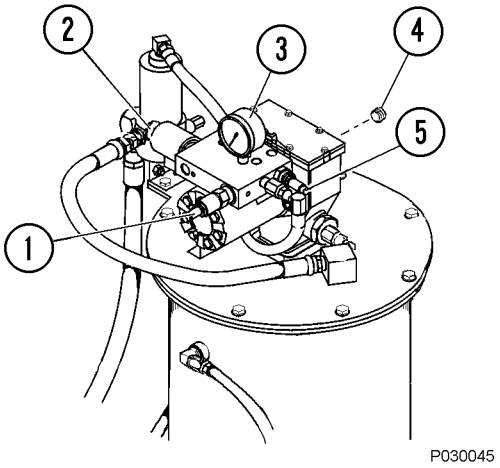

FIGURE 42-6. PUMP CONTROLS

1. Pump Pressure Control
2. Manual Override Switch (Test)
3. Pressure Gauge
4. Oil Level Plug
5. Flow Control Valve

INJECTORS (SL-1 Series “H”)

Injector Specifications

- Each lube injector services only one grease point. In case of pump malfunction, each injector is equipped with a covered grease fitting to allow the use of external lubricating equipment.
- *Injector output volume:*
  Maximum output = ... 0.08 in^3 (1.31 cc)
  Minimum output = ...0.008 in^3 (0.13 cc)
- *Operating Pressure:*
  Minimum - . . . . . 1850 psi (12,755 kPa)
  Maximum - . . . . . 3500 psi (24,133 kPa)
  Recommended - . . . . . 2500 psi (17,238 kPa)
- *Maximum Vent Pressure - (Recharge)*
  . . . . . 600 psi (4137 kPa)

Injector Adjustment

The injectors may be adjusted to supply 0.008 in^3 to 0.08 in^3 (0.13 cc to 1.31 cc) of lubricant per injection cycle. The injector piston travel distance determines the amount of lubricant that is supplied. This travel is, in turn, controlled by an adjusting screw in the top of the injector housing.

Turn adjusting screw (1, Figure 42-7) clockwise to decrease the amount of lubricant delivered or counterclockwise to increase the amount.

When the injector is not pressurized, maximum injector delivery volume is attained by turning adjusting screw (1) fully counterclockwise until indicating pin (8) just touches the adjusting screw. At the maximum delivery point, about 0.38 inch (9.7 mm) of the adjusting screw threads should be showing. Decrease the delivered lubricant amount by turning the adjusting screw clockwise to limit injector piston travel. If only half the lubricant is needed, turn the adjusting screw to the point where about 0.19 inch (4.8 mm) of the threads are showing. The injector will be set at the minimum delivery point if approximately 0.009 inch (0.22 mm) of the threads are showing.

NOTE: The above information concerns adjustment of injector delivery volume. The timer adjustment should also be changed if overall lubricant delivery is too little or too much. Injector output should NOT be adjusted to less than one-fourth (1/4) capacity.

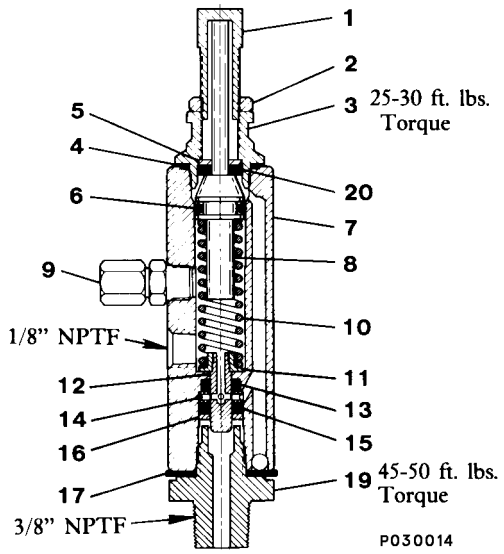

FIGURE 42-7. TYPE SL-1 I INJECTOR

1. Adjusting Screw
2. Locknut
3. Piston Stop Plug
4. Gasket
5. Washer
6. Viton O-Ring
7. Injector Body Assy.
8. Piston Assembly
9. Fitting Assembly
10. Plunger Spring
11. Spring Seat
12. Plunger
13. Viton Packing
14. Inlet Disc
15. Viton Packing
16. Washer
17. Gasket
18. Adapter Bolt
19. Adapter
20. Viton Packing

NOTE: Piston assembly (8) has a visible indicator pin at the top of the assembly to verify injector operation.

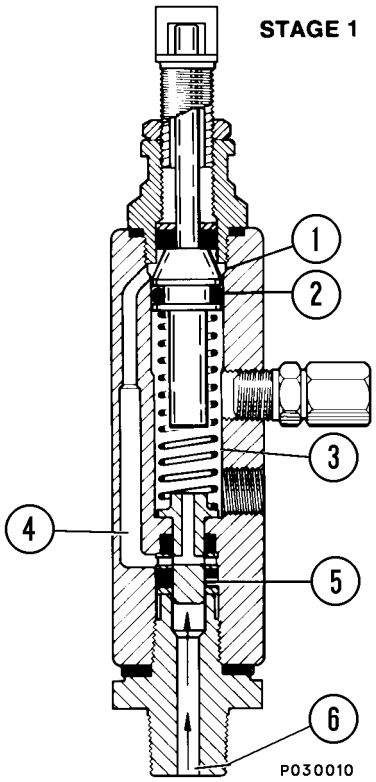

INJECTOR OPERATION

STAGE 1.

Injector piston (2) is in its normal or “rest” position. Discharge chamber (3) is filled with lubricant from the previous cycle. Under the pressure of incoming lubricant (6), slide valve (5) is about to open passage (4) leading to measuring chamber (1) above injector piston (2).

STAGE 2.

When slide valve (5) uncovers passage (4), lubricant (6) is admitted to measuring chamber (1) above injector piston (2), which forces lubricant from discharge chamber (3) through outlet port (7) to the bearing.

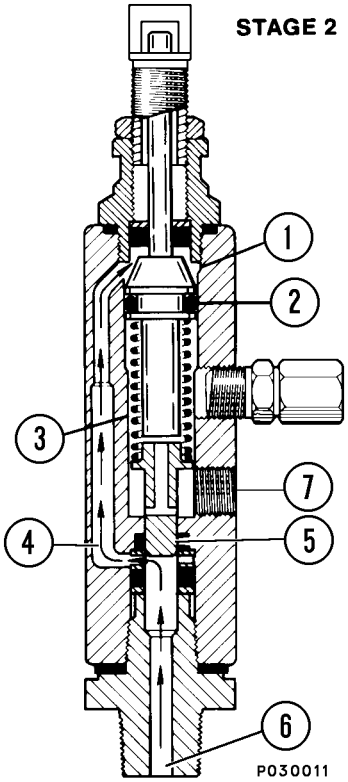

STAGE 3.

As injector piston (2) completes its stroke, it pushes slide valve (5) past passage (4), cutting off further admission of lubricant (6) to passage (4) and measuring chamber (1). Injector piston (2) and slide valve (5) remain in this position until lubricant pressure in supply line (6) is vented.

STAGE 4.

After venting, the injector spring expands, causing slide valve (5) to move so that passage (4) and discharge chamber (3) are connected by valve port (8). Further expansion of the spring causes the piston to move upward, forcing the lubricant in measuring chamber (1) through passage (4) and valve port (8) to refill discharge chamber (3).

The injector is now ready for the next cycle.

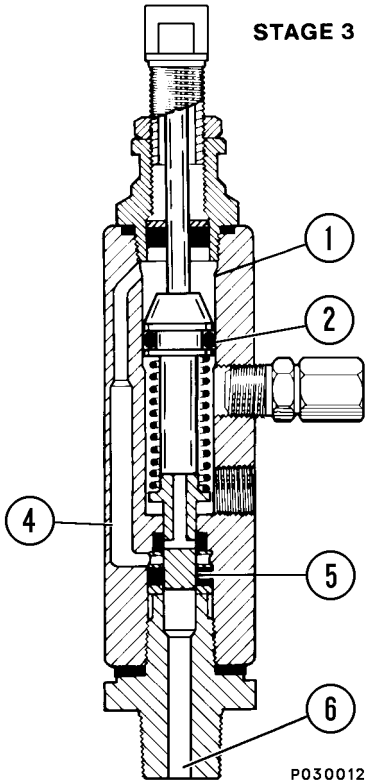

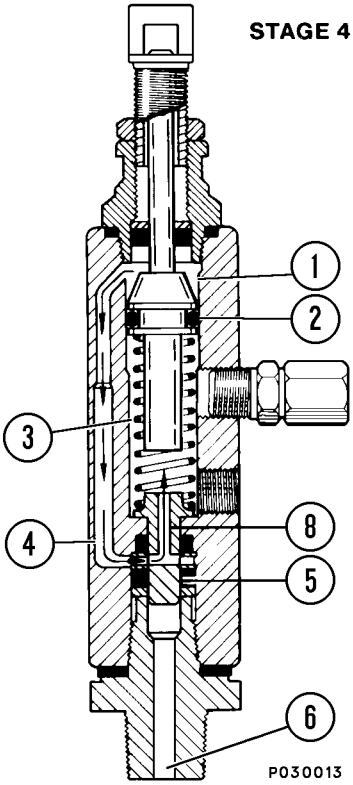

SYSTEM CHECKOUT

To check system operation (not including timer), proceed as follows:

1. Turn the key switch to ON and start the engine.
2. Actuate the lube system test switch at the reservoir/pump assembly.
3. The motor and pump should operate until the system attains 2500 psi (17,237 kPa) of pressure.
4. Once the required pressure is achieved, the pump motor should turn off and the system should vent.
5. Check for pump, hose, or injector damage or leakage with the system under pressure.
6. After checking the system, shut down the engine. Before attempting to repair the lube system, follow normal precautions regarding high voltage present in the propulsion system.

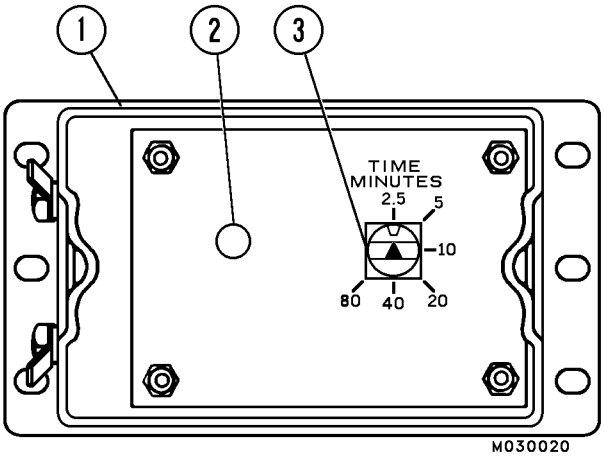

FIGURE 42-8. TIMER
(Shown with cover removed.)

1. Timer Enclosure
2. Red LED
3. Timer Selector

Lubrication Cycle Timer Check

To check the solid state timer operation without waiting for the normal timer setting, proceed as follows:

NOTE: The timer incorporates a liquid and dust tight cover which must be in place and secured at all times during truck operation.

1. Remove timer dust cover.
2. Adjust timer selector (3, Figure 42-8) to 5 minute interval setting.
3. The timer should cycle in 5 minutes if the truck is operating.

NOTE: If the timer check is being made on a cold start, the first cycle will be approximately double the nominal setting. All subsequent cycles should be within the selected time tolerance.

4. Perform voltage checks at the timer if the above checks do not identify the problem.
   a. Ensure that the timer ground connection is clean and tight.
   b. With the key switch in the ON position, use a voltmeter to read the voltage between the positive and negative posts on the solid state timer. A normal reading should be 18 to 26 VDC, depending upon whether or not the engine is running.

Lubrication Cycle Timer Adjustment

The timer is factory set for a nominal 2.5 minute (off time) interval. Dwell time is approximately 1 minute, 15 seconds. A longer interval (off time) is obtained by turning selector knob (3, Figure 42-8) to the desired position.

Set the timer by turning selector knob (3) to the 2.5 minute setting point. Then, turn the selector clockwise one detent at a time to the desired setting, or until the maximum limit of 80 minutes is reached.

NOTE: The timer is a sealed unit. DO NOT attempt disassembly.

PREVENTIVE MAINTENANCE PROCEDURES

The following maintenance procedures should be used to ensure proper system operation.

Daily Lubrication System Inspection

1. Check the grease reservoir level after each shift of operation. Grease usage should be consistent from day-to-day operations. Lack of lubricant usage could indicate an inoperative system. Excessive usage could indicate a broken supply line.
2. Check the filter bypass indicator when filling the reservoir. Replace the element if bypassing.
3. Check all grease feed line hoses from the SL-1 injectors to the lubrication points.
   a. Repair or replace all damaged feed line hoses.
   b. Make sure all air is purged and all new feed line hoses are filled with grease before sending the truck back into service.
4. Inspect key lubrication points for a bead of lubricant around the seal. If a lubrication point appears dry, troubleshoot and repair the problem.

250 Hour Inspection

1. Check all grease feed line hoses from the SL-1 injectors to the lubrication points. Refer to Figure 42-2.
   a. Repair or replace all worn and broken feed line hoses.
   b. Make sure all air is purged and all new feed line hoses are filled with grease before sending the truck back into service.
2. Check all grease supply line hoses from the pump to the SL-1 injectors.
   a. Repair or replace all worn and broken supply lines.
   b. Make sure all air is purged and all new supply line hoses are filled with grease before sending the truck back into service.
3. Check the grease reservoir level.
   a. Fill the reservoir if the level is low. Check the filter bypass indicator when filling the reservoir. Replace the element if bypassing.
   b. Check the reservoir for contaminants. Clean the reservoir, if required.
   c. Check that all filler plugs, covers, and breather vents on the reservoir are intact and free of contaminants.
4. Inspect all bearing points for a bead of lubricant around the bearing seal.

   It is good practice to manually lubricate each bearing point at the grease fitting provided on each injector. This will indicate whether there are any frozen or plugged bearings and will help flush contaminants from the bearings.

5. System Checkout
   a. Remove all SL-1 injector cover caps to allow visual inspection of the injector cycle indicator pins during system operation.
   b. Start the engine.
   c. Actuate lube system manual override (test) switch (6, Figure 42-1). The hydraulic motor and grease pump should operate.
   d. With the grease under pressure, check each SL-1 injector assembly. The cycle indicator pin should be retracted inside the injector body.
   e. When the system attains 2500 psi (17,237 kPa), the pump should shut off and the pressure in the system should drop to zero, venting back to the grease reservoir.
   f. With the system vented, check all of the SL-1 injector indicator pins. All of the pins should be visible. Replace or repair injectors if defective.
   g. Reinstall all injector cover caps.
   h. Check timer operation.

NOTE: With engine running, the lube system should activate within 5 minutes. System pressure should build to 2000 to 2500 psi (13,789 to 17,237 kPa) within 25 to 40 seconds.

   i. If the system is working properly, the machine is ready for operation.
   j. If the system is malfunctioning, refer to the troubleshooting chart.

1000 Hour Inspection

Remove oil level plug (17, Figure 42-2) to check the pump housing oil level. Refill to the bottom of the level plug with SAE 10W-30 motor oil, if necessary.

SYSTEM TROUBLESHOOTING CHART

NOTE: If the following procedures do not correct the problem, contact a factory authorized service center.

TROUBLE	POSSIBLE CAUSES	SUGGESTED CORRECTIVE ACTION
Pump does not operate.	Lube system is not grounded.	Correct grounding connections to pump assembly and truck chassis.
	There is a loss of electrical power.	Locate cause of power loss and repair. 24VDC power is required. Be sure key switch is ON.
	Timer is malfunctioning.	Replace timer assembly.
	Solenoid valve is malfunctioning.	Replace the solenoid valve assembly.
	Relay is malfunctioning.	Replace relay.
	Motor or pump is malfunctioning.	Repair or replace motor and/or pump assembly. Refer to Service Manual for rebuild instructions.
	NOTE: On initial startup of the lube system, the timing capacitor will not contain a charge. Therefore, the first timing cycle will be approximately double in length compared to the normal interval. Subsequent timer cycles should be as specified.	
Pump will not prime.	Lubricant supply is low; caused by dirt in reservoir or clogged pump inlet or filter.	Clean reservoir, pump inlet or filter.
Pump will not build pressure.	Air is trapped in lubricant supply line.	Prime system to remove trapped air.
	Lubricant supply line is leaking.	Check lines and connections to repair leakage.
	Vent valve is leaking.	Clean or replace vent valve.
	Pump is worn or scored.	Repair or replace pump assembly. Refer to Service Manual for rebuild instructions.
Injector indicator stem does not operate.	*NOTE: During operation, the injector indicator stem will normally move into the body of the injector when pressure builds properly. When the system vents (pressure release), the indicator stem will again move out into the adjusting yoke.*	
	Injector is malfunctioning; usually indicated by pump building pressure and then venting.	Replace individual injector assembly.
	All injectors are inoperative. Pump build up is not sufficient to cycle injectors.	Service and/or replace pump assembly. Refer to Service Manual for rebuild instructions.
Pressure gauge does not register pressure.	There is no system pressure to pump motor.	Check hydraulic hose from steering system.
	There is no 24VDC signal at pump solenoid.	Determine problem in 24VDC electric system.
	Pressure reducing valve is set too low.	Refer to Pressure Control Valve Adjustment.
	24V relay (RB7, K5) may be defective.	Replace relay.

TROUBLE	POSSIBLE CAUSES	SUGGESTED CORRECTIVE ACTION
Pump pressure builds very slowly or not at all.	There is no signal at 24V relay.	Check timer.
	Pressure switch may be defective.	Replace pressure switch.
	Pressure reducing valve may be set too low.	Refer to Pressure Control Valve Adjustment.
	Grease viscosity may be too high for temperature at which pump is operating.	Replace grease with a lower viscosity lubricant.
	Pump inlet check or outlet check may have foreign matter trapped causing leakage.	Remove, inspect and clean if necessary. Inspect sealing surfaces between checks. Replace if rough or pitted.
	Lubricant supply line leaks or is broken.	Repair lubricant supply line.
	Hydraulic oil supply is insufficient.	Check oil pressure and flow to motor.
24VDC timer does not operate.	Timer BAT (-) connection is not on grounded member.	Connect to good ground.
	24VDC not present at timer BAT (+) connection during operation of vehicle.	Check circuit # 71 wiring between timer connection and TB32 in Electrical Interface Cabinet.
	There may be loose wire connections at any of the timer terminals.	Secure wire connections.
Timer stays timed-out.	There is a commutation failure in timer; caused by damaged component.	Replace timer.
	Output relay contacts are welded shut; caused by extended short to ground.	Replace timer.
	Solenoid valve is connected to LUBE SW terminal of timer instead of terminal marked SOL.	Correct wiring hook-up.
Timer turns on at intervals 2 to 10 times more often than set time interval.	Electrical noise is being introduced into the power supply to the timer, overcoming suppressor capacitor and causing uncontrolled turn-on of its output relay.	In some instances, electrical noise may be generated into vehicle electrical system, which may cause timer to turn on at random intervals independent of timer setting. If this occurs, a 250 to 1000 MFD capacitor (rated 150 to 350 VDC) should be added across BAT (+) and BAT (-) terminals to suppress this noise and improve timer performance.
Timer turns on at faster intervals than allowable tolerances of settings.	Timer is out of adjustment or component is damaged.	Refer to Timer Adjustment. Re-adjust or replace timer.

NOTES:

COMPONENTS & SPECIFICATIONS

MAJOR COMPONENT DESCRIPTIONS

Truck And Engine

The 930E-3 Dump Truck is an off-highway, rear dump truck with AC Electric Drive. The gross vehicle weight is 1,100,000 lbs. (498 960 kg). The engine is a Komatsu SSDA16V160 rated @ 2700 HP (2014 kW).

Alternator (GE-GTA41)

The diesel engine drives an in-line alternator at engine speed. The alternator produces AC current which is rectified to DC within the main control cabinet. The rectified DC power is converted back to AC by groups of devices called "inverters", also within the main control cabinet. Each inverter consists of six "phase modules" under the control of a "gate drive unit" (GDU). The GDU controls the operation of each phase module.

Each phase module contains an air-cooled solid-state switch referred to as a "gate turn-off thyristor" (GTO). The GTO cycles on and off at varying frequencies to create an AC power signal from the DC supply.

The AC power signal produced by each inverter is a Variable-Voltage, Variable-Frequency signal (VVVF). Frequency and voltage are changed to suit the operating conditions.

Cooling air for the control/power group and wheel motors, as well as the alternator itself, is provided by dual fans mounted on the alternator shaft.

AC Induction Traction Motorized Wheels

The alternator output supplies electrical energy to the two wheel motors attached to the rear axle housing. The motorized wheels use three-phase AC induction motors with full-wave AC power.

The two wheel motors convert electrical energy back to mechanical energy through built-in gear trains within the wheel motor assembly. The direction of the wheel motors is controlled by a forward or reverse hand selector switch located on the center console.

Suspension

Hydrair II® suspension cylinders located at each wheel provide a smooth and comfortable ride for the operator and dampens shock loads to the chassis during loading and operation.

Operator's Cab

The operator cab has been engineered for operator comfort and to allow for efficient and safe operation of the truck. The cab provides wide visibility with an integral 4-post ROPS/FOPS structure and an advanced analog operator environment. It includes a tinted safety-glass windshield and power-operated side windows, a deluxe interior with a fully adjustable seat with lumbar support, a fully adjustable/tilt steering wheel, controls mounted within easy reach of the operator, and an analog instrument panel which provides the operator with all instruments and gauges which are necessary to control and/or monitor the truck's operating systems.

Power Steering

The truck is equipped with a full time power steering system which provides positive steering control with minimum operator effort. The system includes nitrogen-charged accumulators which automatically provide emergency power if the steering hydraulic pressure is reduced below an established minimum.

Dynamic Retarding

The dynamic retarding is used to slow the truck during normal operation or control speed coming down a grade. The dynamic retarding ability of the electric system is controlled by the operator through the activation of the retarder pedal (or by operating a lever on the steering wheel) in the operators cab and by setting the RSC (Retarder Speed Control). Dynamic retarding is automatically activated, if the truck speed goes to a preset overspeed setting.

Brake System

Service brakes at each wheel are oil-cooled multiple disc brakes applied by an all-hydraulic actuation system. Depressing the brake pedal actuates both front and rear brakes after first applying the retarder. All wheel brakes will be applied automatically if the brake system pressure decreases below a preset minimum.

The parking brake is a dry disc type, mounted inboard on each rear wheel motor, and is spring-applied and hydraulically-released with wheel speed application protection (will not apply with truck moving).

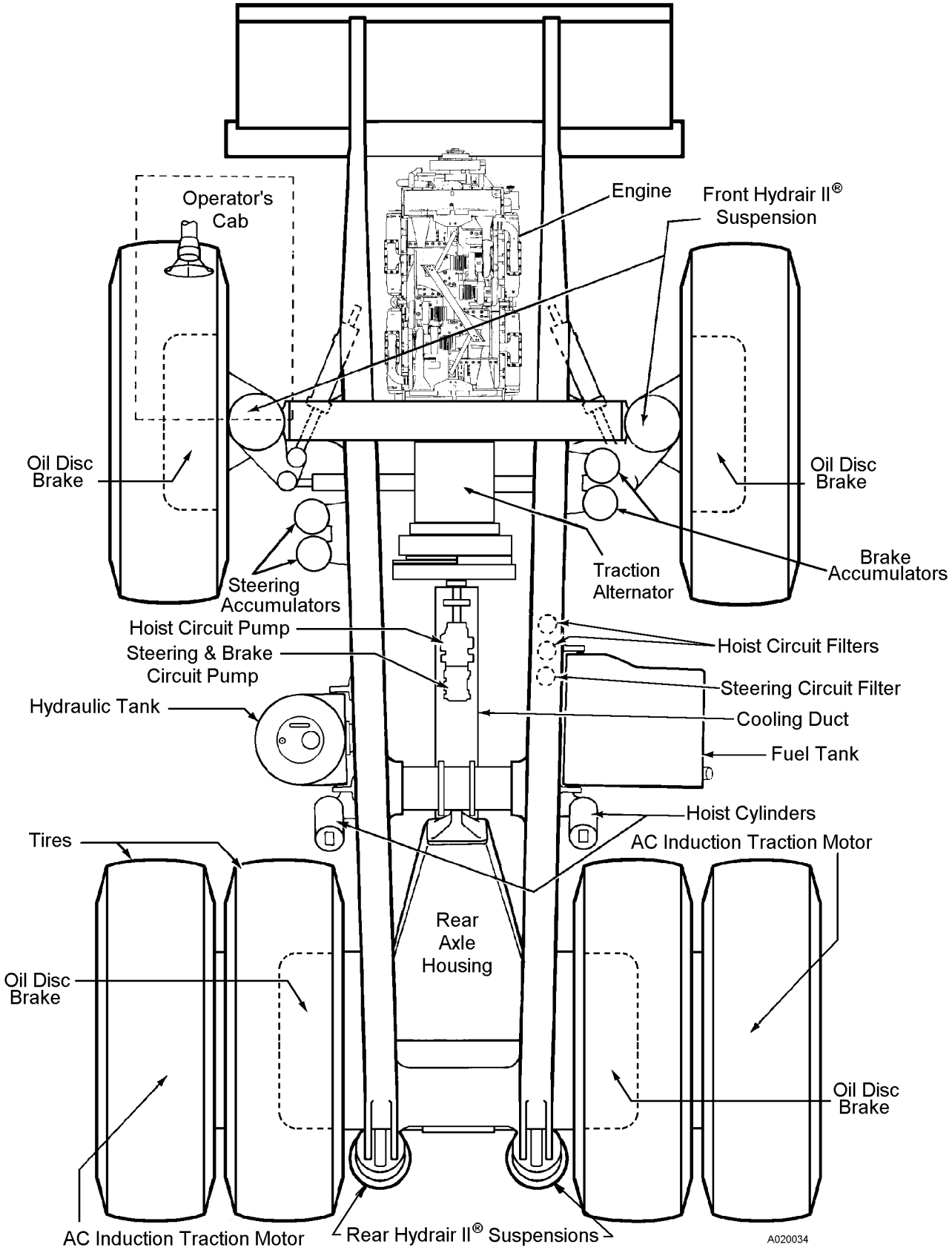

930E-3 MAJOR COMPONENTS

SPECIFICATIONS

These specifications are for the standard Komatsu 930E Truck. Customer Options may change this listing.

ENGINE

Komatsu SSDA16V160

No. of Cylinders 16
Operating Cycle 4-Stroke
Rated Brake HP. . . .2700 HP (2014 kW) @ 1900 RPM
Flywheel HP . . . . . .2550 HP (1902 kW) @ 1900 RPM
Weight* (Wet) . . . . . .21,182 pounds (9608 kg)
* Weight does not include Radiator, Sub-frame, or Alternator

AC ELECTRIC DRIVE SYSTEM

(AC/DC Current)

Alternator . . . . . General Electric GTA - 41
Dual Impeller, In-Line Blower. 12,000 cfm (340 m³/ min)
Motorized Wheels . . . . GDY106 AC Induction Traction Motors
Standard Gear Ratio*. 32.62:1
Maximum Speed . . . . . .40 MPH (64.5 km/h)
*NOTE: Wheel motor application depends upon GVW, haul road grade and length, rolling resistance, and other parameters. Komatsu & G.E. must analyze each job condition to assure proper application.

DYNAMIC RETARDING

Electric Dynamic Retarding . . . . . Standard
Maximum Rating . . . . . 5400 HP (4026 kW)
Continuous . . . . . 3300 HP (2460 kW)
Continuously rated high-density blown grids with retard at engine idle and retard in reverse propulsion.

BATTERY ELECTRIC SYSTEM

Batteries . 4 x 8D 1450 CCA, 12 volt, in series/parallel, and 2 x 30H 800CCA, 220-ampre-hour batteries, bumper mounted with disconnect switch
Alternator . . . . . 24 Volt, 260 Ampere Output
Lighting . . . . . 24 Volt
Starters (2). . . . . 24 Volt

SERVICE CAPACITIES

Crankcase . . . . . 74 US gal. (280 Liters)
(includes lube oil filters)
Cooling System . . . . . 157 US gal. (594 Liters)
Fuel . . . . . .1200 US gal. (4542 Liters)
Hydraulic System. . . . . .350 US gal. (1325 Liters)
Wheel Motor Gear Box . . . . . 25 US gal. (95 Liters)
(per wheel)

HYDRAULIC SYSTEMS

Hoist & Brake Cooling Pump: . . . . . Tandem Gear
Rated @ . . . . . 246 GPM (931 l/min.) @ 1900 RPM and 2500 psi (17 237 kPa)
Steering/Brake Pump: . Pressure Compensated Piston
Rated @ . . . . . 65 GPM (246 l/min.) @ 1900 RPM and 2750 psi (18 961 kPa)
Relief Pressure-Hoist. . . . . 2500 psi (17.2 MPa)
Relief Pressure-Steering/Brake . . 4000 psi (27.6 MPa)
Hoist Cylinders (2) . . . . . 3-Stage Hydraulic
Tank (Vertical/Cylindrical) . . . . . Non-Pressurized
Tank Capacity . . . . . 250 US Gal. (947 Liters)
Filtration . . . . . In-line replaceable elements
Suction. . . . . .Single, Full Flow, 100 Mesh
Hoist & Steering Filters .....Beta $_{12}$ Rating =200 Dual In-Line, High Pressure

SERVICE BRAKES

All Hydraulic Actuation. . . . . with Traction System Wheel Slip / Slide Control
Front and Rear Oil-Cooled Multiple Discs . .each wheel
Total Friction Area / Brake . . . . 15,038 in² (97,019 cm²)
Maximum Apply Pressure . . . . . 2500 psi (17,238 kPa)

STEERING

Turning Circle (SAE) . . . . . .97 ft. 7 in. (30.4 m)

Twin hydraulic cylinders with accumulator assist to provide constant rate steering. Emergency power steering automatically provided by accumulators.

STANDARD DUMP BODY CAPACITIES AND DIMENSIONS

Capacity

Heaped @ 2:1 (SAE). . . . . .276 yd^3 (211 m^3)
Struck . . . . . .224 yd^3 (171 m^3)
Width (Inside) . . . . . 26 ft. 9 in. (8.15 m)
Depth . . . . . 10 ft. 7 in. (3.2 m)
Loading Height . . . . . 23 ft. 2 in. (7.06 m)
Dumping Angle. . . . . 45°
*OPTIONAL capacity dump bodies are available.

TIRES

Radial Tires (standard) 53/80 R63
Rock Service, Deep Tread . . . . . Tubeless
Rims . . . . . (patented Phase I New Generation™ rims)

WEIGHT DISTRIBUTION

Empty Vehicle

Front Axle (49.3%) . . . . . .227,738 lbs. (103,301 kg)
Rear Axle (50.7 %) . . . . . .237,034 lbs. (107,518 kg)
Total (50% Fuel) . . . . . 464,772 lbs. (210,819 kg)
Standard Komatsu body . . . . . 66,936 lbs. (30,362kg)
Standard tire weight . . . . . .57,600 lbs. (26,127 kg)

Loaded Vehicle

Front Axle (33.0%) . . . . . .364,980 lbs. (165,554 kg)
Rear Axle (67.0%) . . . . . .741,020 lbs. (336,124 kg)
Total . . . . . 1,106,000 lbs. (501,673 kg)
Nominal Payload* . . . . . .641,228 lbs. (290,859 kg)

* Nominal payload is as defined within Komatsu America Corporation's payload policy documentation. Nominal payload must be adjusted should the weight of any customized body or tires fitted vary from that of the standard Komatsu body and tires as shown above. Nominal payload must also be adjusted to take into account the additional weight of any custom/optional extras fitted to the truck which are not stated within the Standard Features list of the applicable specification sheet.

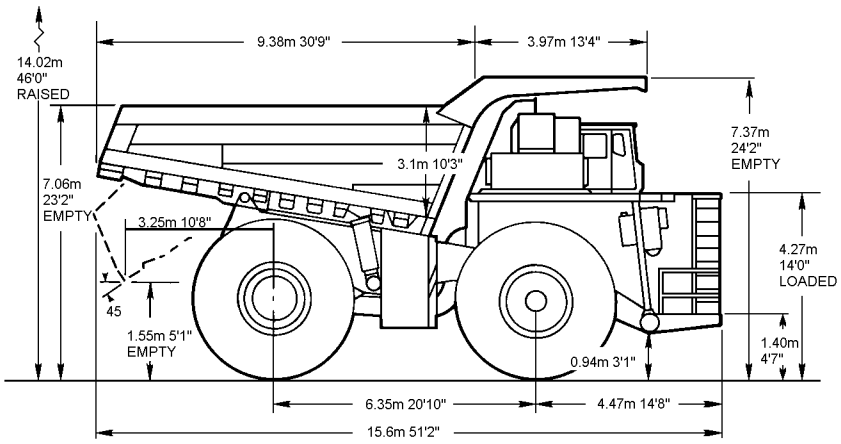

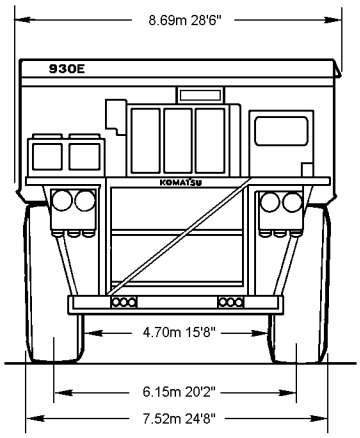

All Dimensions with 171/211m³ 224/276 yd³ Body

BODIES	Struck		2:1 Heap		Loading Height	
	M³	Yd³	M³	Yd³	M	Feet
Standard	171	224	211	276	7.06	23'2"

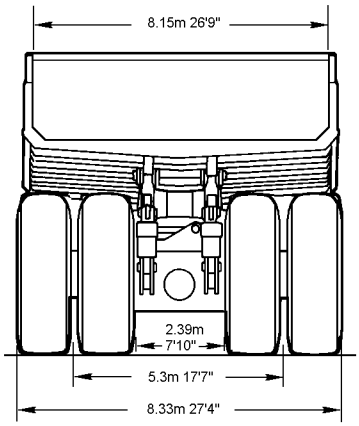

A020033

PAYLOAD METER III™

INDEX

INTRODUCTION 60-3
Data Summary 60-3
Data Gathering 60-3
COMPONENT DESCRIPTION 60-4
System Diagram 60-4
Suspension Pressure Sensors 60-4
Inclinometer 60-4
Operator Display 60-4
Operator Switch 60-5
Speed Input 60-5
Body-Up Switch 60-5
Brake Lock Switch 60-5
Payload Meter 60-5
Communications Ports 60-5
Keyswitch Input 60-6
Payload Meter Power 60-6
Load Lights 60-6
Wiring and Termination 60-7
TCI Outputs 60-7
OPERATOR'S DISPLAY AND SWITCH 60-8
Reading the Speedometer 60-8
Reading the Load Display 60-8
Using the Operator ID 60-8
Using the Load and Ton Counter 60-8
Total Ton Counter 60-8
Total Load Counter 60-9
Clearing the Counters 60-9
Viewing Live Sensor Data 60-9
Other Display Messages 60-9
PAYLOAD OPERATION & CALCULATION 60-10
Description of Haul Cycle States 60-10
Haul Cycle Description 60-10
Load Calculation 60-11
Carry Back 60-11
Measurement Accuracy 60-11
SOURCES FOR PAYLOAD ERROR 60-11
Payload Error 60-11
Loading Conditions 60-12
Pressure Sensors 60-12
Swingloads 60-12
Speed and Distance 60-12
HAUL CYCLE DATA 60-12
Haul Cycle Data 60-13
Haul Cycle Warning Flags 60-14

M: Haul Cycle Too Long 60-15
N: Sensor Input Error 60-15
Frame Torque Data 60-15
Sprung Weight Data 60-15
Maximum Speed Data 60-15
Alarm Records 60-15
Fault Code Data 60-16
PC SOFTWARE OVERVIEW 60-17
PC Overview 60-17
System Configuration 60-17
Installing the PLMIII Software 60-17
DOWNLOADING DATA 60-18
PLM III SYSTEM CONFIGURATION 60-19
Starting Communications 60-19
Displayed Payload Units 60-19
Time Units 60-19
Connection Menu 60-19
Connecting to the Payload Meter 60-20
Configure the Payload Meter 60-20
Setting the Date and Time 60-20
Setting the Truck Type 60-21
Setting the Gauge Display Units 60-21
Setting the Frame Serial Number 60-21
Setting the Truck Number 60-21
Setting the Komatsu Distributor 60-21
Setting the Komatsu Customer 60-21
Clean Truck Tare 60-22
Inclinometer Calibration 60-22
DATA ANALYSIS 60-23
Creating a Query 60-23
Sorting on Truck Unit Number 60-23
Sorting on Truck Type 60-23
Sorting on Date Range 60-24
Sorting on Time Range 60-24
Payload Detail Screen 60-25
Creating Reports 60-25
Summary - one page report 60-26
Detailed - multi-page report 60-26
Creating Graphs 60-27
Exporting Data 60-27
CSV Export 60-27
Compressed 60-28
Importing Data 60-29
Deleting Haul Cycle Records 60-29
Viewing Alarms 60-30
Deleting Alarm Records 60-30

INTRODUCTION

Payload Meter III (PLMIII) measures, displays and records the weight of material being carried by an off-highway truck. The system generally consists of a payload meter, a gauge display, deck-mounted lights, and sensors. The primary sensors are four suspension pressures and an inclinometer. Other inputs include a body up signal, brake lock signal, and speed.

Data Summary

5208 haul cycles can be stored in memory. The following information is recorded for each haul cycle:

- Payload
- Operator ID number (0000-9999)
- Distance traveled loaded and empty
- The amount of time spent empty run/stop, loading, loaded run/stop, and dumping
- Maximum speed loaded and empty with time of day
- Average speed loaded and empty
- Empty carry-back load
- Haul-cycle, loading, dumping start time of day.
- Peak positive and peak negative frame torque with time of day
- Peak sprung load with time of day
- Tire ton-mph for each front and average per rear tires

The payload meter stores lifetime data that cannot be erased. This data includes:

- Top 5 maximum payloads and time stamps.
- Top 5 positive and negative frame torque and time stamps
- Top 5 maximum speeds and time stamps

Data Gathering

Windows 95/98/NT software is available to download, store and view payload and fault information. The PC software will download an entire truck fleet into one Paradox database file. Users can query the database by date, time, truck type and truck number to produce reports, graphs and export the data. The software can export the data in '.CSV' format that can be easily imported into most spreadsheet applications. The Windows software is not compatible with the Payload Meter II system.

It is important that each payload meter be configured for each truck using the PC software. The information for frame serial number and truck number is used by the database program to organize the payload data. In addition, the payload meter must be configured to make calculations for the proper truck model. Improper configuration can lead to data loss and inaccurate payload calculations.

COMPONENT DESCRIPTION

System Diagram

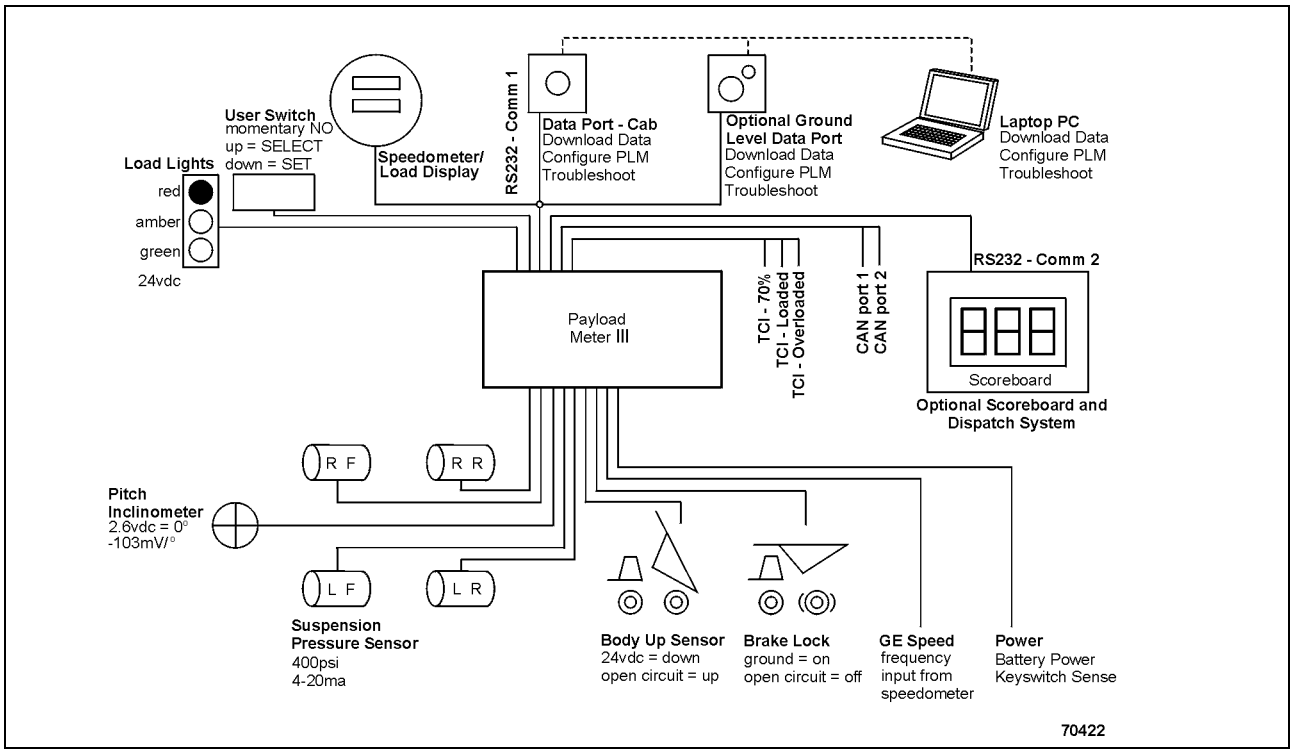

Suspension Pressure Sensors

PLMIII uses a two-wire pressure sensor. The range for the pressure sensor is 4000 psi (281 kg/cm^2) and the overload limit is 10,000 psi (700 kg/cm^2). One wire to the sensor is the supply voltage and the other is the signal. The 0-4000 psi range is converted into an electrical current between 4-20 ma. The supply voltage for the sensor is nominally +18vdc. Each pressure sensor has an 118 in. (3000 mm) length of cable. The cable is specially shielded and reinforced to provide mechanical strength and electronic noise immunity.

Inclinometer

The inclinometer is used to increase the accuracy of load calculations on an incline. The inclinometer uses three wires. For the sensor, red is the +18vdc supply voltage, black is ground and the white is the signal. The incline signal is a voltage between 1 and 4 volts. Zero degrees of incline is represented by 2.6vdc on the signal line. The voltage signal will be decreased by 0.103vdc for every degree of nose up incline.

Operator Display

The speedometer/display gauge is used as a speedometer and payload display. The top display is used for speed and can display metric (km/h) or English (mph) units. Grounding terminal #4 on the back of the speedometer will switch the meter to display metric units. Leaving terminal #4 unconnected will cause the gauge to display English units. The speedometer can be adjusted using a calibration potentiometer in the back just like existing speedometers.

The payload meter uses the lower display for payload information. The normal display mode shows the current payload. The display can be changed to show the load and total tons counter or the Operator ID. Using the operator switch on the dash panel, the current suspension pressures and incline can be displayed. The units for display are set using the PC software. Payloads can be displayed in short tons, long tons or metric tons.

Operator Switch

The payload operator switch is used to set, view and clear the total load counter and total ton counter. It is also used to enter the operator ID number (0-9999). This switch can also be used to view the suspension pressures and inclinometer. The payload meter operator switch is located on the dashboard. It is a two-way momentary switch. The top position is the SELECT position. The SELECT position is used step through the different displays. The lower position is the SET position. The SET position is used to set the operator ID or clear the load and total ton counters. Normally the inputs from the switch to the payload meter are open circuit. The switch momentarily connects the circuit to ground.

Speed Input

PLMIII uses a speed signal to calculate speed, distance, and other performance data. This input is critical to the proper operation of the system. PLMIII receives this signal from the speedometer/operator display on the dashboard. The same signal displayed to the operator is used by the system. Distance calculations are made based on the rolling radius of the tires for a particular truck.

Body-Up Switch

The body-up input signal is received from a magnetic switch located on the inside of the truck frame, forward the pivot pin of the truck body. This is the same switch typically used for input to the drive system. When the body is down, the switch closes and completes the circuit to 71-control power. 24vdc indicates the body is down. Open circuit indicates that the body is up.

Brake Lock Switch

The brake lock is used to lock the rear brakes on the truck. It is necessary for the accurate calculation of swingloads during the loading process. Without the brake lock applied, the payload meter will not calculate swingloads during the loading process. Without the brake lock, the payload meter will assume that the truck was loaded using a continuous loader and flag the haul cycle record. All other functions will be normal regardless of brake lock usage. The brake lock input comes from the switch located on the dash panel. The brake lock switch connects the circuit to ground. Open circuit indicates brake lock off. Ground indicates brake lock on.

Payload Meter

The payload meter is housed in a black aluminum housing. There is a small window on the face of the unit. Status and active alarm codes can be viewed through the window. During normal operation, a two-digit display flashes 0 back and forth. Active fault codes will be displayed for two seconds. These codes are typically viewed using the laptop computer connected to the serial communications port.

There is one 40-pin connector on the payload meter. A jack-screw is used to hold the payload meter and wire harness connector housings together. This screw requires a 4mm or 5/32 hex wrench. The correct tightening torque for this screw is 25 lb-in. Four bolts hold the payload meter housing to its mounting bracket in the cab.

The circuit board inside the payload meter housing is made from multi-layer, dual-sided surface-mount electronics. There are no field serviceable components inside. The electronics are designed to withstand the harsh operating environment of the mining industry. Opening the payload meter housing will result in voiding the warranty.

Communications Ports

The payload meter has two RS232 serial communications ports and two CAN ports. Connections for the two serial ports are available inside the payload meter junction box. The two CAN ports are available for future electronics systems.

Serial port #1 is used to communicate with the dashboard display. It is also used to connect to the laptop computer. The display gauge will remain blank when the PC is using the serial port. This port initially operates with serial settings at 9600,8,N,1. These settings change automatically to increase the communications rate when the PC is using the port. This serial port uses a 3-wire hardware connection.

Serial port #2 is used to communicate to other on-board electronics like Modular Mining's Dispatch® system or the scoreboard from Komatsu. This port uses a 3-wire hardware connection. Connections to this serial port need to be approved by Komatsu. Several protocol options are available and detailed technical information is available depending on licensing.

Keyswitch Input

PLMIII monitors the status of the keyswitch. 24vdc indicates that the keyswitch is on, open indicates the keyswitch is off. The payload meter does not receive its electrical power from the keyswitch circuit. The payload meter will remain on for several seconds after keyswitch is removed. When the keyswitch power is removed, payload meter performs a series of internal memory operations before turning itself off. To allow for these operations, the keyswitch should be turned off for at least 15 seconds before turning the keyswitch back on. The payload meter will automatically reset itself without error if not enough time is given for these operations. The display may blink briefly.

Payload Meter Power

The payload meter receives its power from the battery circuit on the truck. Removing battery power from the payload meter before removing keyswitch and waiting 15 seconds may result in lost haul cycle data. The payload meter turns itself off approximately 15 seconds after the keyswitch power is removed. Some haul cycle data will be lost if battery power is removed before waiting 15 seconds. The payload meter system operates at a nominal voltage of 24vdc at 1 to 2 amps depending on options. The payload meter is designed to turn itself off if the supply voltage rises above 36vdc. The payload meter is also protected by a 5 amp circuit breaker located in the junction box.

Power to the load lights comes from the same battery circuit. The load lights are powered through a relay. The keyswitch circuit controls the relay. The load lights are also protected by a 15 amp circuit breaker in the junction box.

Load Lights

PLMIII uses load lights to indicate to the shovel operator the approximate weight of the material in the truck. The load lights are illuminated only when the brake lock is applied. The lights are controlled by the payload meter through a series of relays in the junction box. The payload meter controls the relays with 24vdc outputs. A 24vdc signal from the payload meter powers the relay coil and connects battery power to the load light. When the relay is not powered by the payload meter, a pre-warm resistor connects the load light to a reduced voltage. This circuit pre-warms the load light filaments and reduces the inrush current when the light is fully illuminated. This lengthens the operating life of the load lights.

The load lights progressively indicate to the shovel operator the approximate weight of the material in the truck.

A flashing green light indicates the next swingload will make the measured load greater than 50% of rated load. A solid green light indicates that the current load is greater than 50% of rated capacity.

A flashing amber light indicates the next swingload will make the measured load greater than 90% of rated load. A solid amber light indicates that the current load is greater than 90% of rated capacity.

A flashing red light indicates the next swingload will make the measured load greater than 105% of rated load. A solid red light indicates that the current load is greater than 105% of rated capacity.

The optimal loading target is a solid green and amber lights with a flashing red light. This indicates that the load is between 90% and 105% of rated load for the truck and the next swingload will load the truck over 105%.

Wiring and Termination

Most of the PLMIII truck connections use a heavy-duty cable. This yellow multi-conductor cable uses a 16awg, finely stranded wire designed for continuous motion operations. The conductors are protected by a foil and braided shield for electronic noise immunity and physical strength. This wire is typically terminated with a #10 ring terminal. Most connections for the PLMIII system are made in the payload meter junction box.

TCI Outputs

The GE drive system on the 930E requires information from the payload meter regarding the loaded condition of the truck. There are three outputs from the payload meter to GE to indicate the relative load in the truck. 24 vdc on the 73MSL circuit indicates that the load is 70% of rated load. 24 vdc on the 73FSL circuit indicates the truck is 100% loaded. The 73OSL circuit is not currently used.

OPERATOR'S DISPLAY AND SWITCH

Reading the Speedometer

The top window of the speedometer/display gauge is the speedometer section. The display shows the speed indicated by the frequency being received by the gauge. This can be adjusted using the potentiometer on the back of the gauge. In addition, the units for the display can be changed. Terminal #4 controls the displayed units. If #4 is grounded, the display will be metric. If terminal #4 is left open, the display will be in English units.

Reading the Load Display

The lower display on the speedometer/display gauge is used for payload information. The SELECT position on the operator switch allows the user to scroll through a number of useful displays. The order for the displays is as follows:

- PL = Payload
- Id = Operator ID
- tL = Total Shift Tons
- LC = Shift Load Counter
- LF = Left Front Suspension Pressure
- rF = Right Front Suspension Pressure
- Lr = Left Rear Suspension Pressure
- rr = Right Rear Suspension Pressure
- In = Inclinometer

The display holds the displayed information until the SELECT switch is pressed again. The suspension pressures, inclinometer, and payload displays are based on current sensor inputs.

Communications to the display use the same serial link as the download connection. Whenever another computer is connected to serial port #1 to download or configure the system, the lower display will blank. This is not the same connection used by mine dispatch systems.

Using the Operator ID

The current operator ID number is recorded with each haul cycle. The number can be between 0 and 9999.

To set the Operator ID:

1. Press the "SELECT" switch until Id= is displayed.
2. Hold the "SET" button until 0000 is displayed. The first digit should be flashing.
3. Press the "SET" button again to change the digit.
4. Press the "SELECT" button once to adjust the second digit.
5. Use the "SET" button again to change the digit.
6. Press the "SELECT" button once to adjust the third digit.
7. Use the "SET" button again to change the digit.
8. Press the "SELECT" button once to adjust the fourth digit.
9. Use the "SET" button again to change the digit
10. Press the "SELECT" button one more time to enter the ID.

If no buttons are pressed for 30 seconds, the display will return to normal operation. The number being entered will be lost and the ID number returns to the previous ID number.

Using the Load and Ton Counter

PLMIII allows the truck operator to monitor and track the total tons hauled and the number of haul cycles during the shift. This display can be cleared at the beginning of each shift to allow the operator to record how many loads and tons have been hauled during the shift.

Total Ton Counter

The total ton counter records the number of tons hauled since the last time it was cleared. This display is in 100's of tons. For example, if the display shows 432 the total tons is 43,200. This display can be cleared at the beginning of each shift to allow the operator to record how many tons have been hauled during the shift. The units are selected using the PC software.

- To view the total ton counter press and release the "SELECT" switch until tL = is displayed on the gauge.

Total Load Counter

The total load counter records the number of loads hauled since the last time it was cleared. This display can be cleared at the beginning of each shift to allow the operator to record how many loads have been hauled during the shift.

- To view the total load counter press and release the “SELECT” switch until LC = is displayed on the gauge.

Clearing the Counters

Clearing the total ton counter or total load counter clears both records.

To clear the total ton and total load counter:

1. Press the “SELECT” switch until tL = or LC = is displayed.
2. Hold the “SET” button until the display clears.

Viewing Live Sensor Data

The display can also be used to quickly show the current readings from the four suspension pressure sensors and the inclinometer. This can be used during regularly scheduled service periods to check the state of the suspensions. These displays are live and will update as the values change.

The live displays cannot be cleared and the SET button will have no effect.

The units for the display are controlled by the configuration of the payload meter. If the payload meter is set to display metric units, the pressures will be displayed in tenths of kg/cm^2. For example, if the display shows 202 the actual value is 20.2 kg/cm^2. If the payload meter is set to display short tons, the pressures will be displayed in psi (lbs/in^2). Multiply by 14.2 to convert kg/cm^2 to psi. (example -- 1kg/cm^2 x 14.2 = 14.2 psi). There is no way to detect the units setting for the gauge without the PC software.

The inclinometer displays whole degrees of incline. Positive incline is truck nose up. The gauge will quickly display the type of information shown every 10 seconds. For example, if the left-front pressure is being displayed, LF = will flash on the display every minute. Only the payload display, PL = does not display this information.

- Left Front Pressure - To display the pressure in the left-front suspension, press and release the “SELECT” switch until LF = is displayed.
- Right Front Pressure - To display the pressure in the right-front suspension, press and release the “SELECT” switch until rF = is displayed.
- Left Rear Pressure - To display the pressure in the left-rear suspension, press and release the “SELECT” switch until Lr = is displayed.
- Right Rear Pressure - To display the pressure in the right-rear suspension, press and release the “SELECT” switch until rr = is displayed.
- Inclinometer - To display the truck incline, press and release the “SELECT” switch until In = is displayed.

Other Display Messages

On startup of the payload meter system, the gauge display will scroll the truck type that the PLMIII is configured for. For example, on a 930E, the gauge will scroll, ----930E---.

If the PLMIII encounters memory problems, it will display ER88 where 88 is the specific memory error. In this very rare circumstance, the system should be turned off for 30 seconds and restarted.

PAYLOAD OPERATION & CALCULATION

Description of Haul Cycle States

The typical haul cycle can be broken down into eight distinct stages or states. Each state requires the payload meter to make different calculations and store different data.

“States" or stages of a typical haul cycle

1. Tare Zone
2. Empty
3. Loading
4. Maneuvering
5. Final Zone
6. Hauling
7. Dumping
8. After Dump

Haul Cycle Description

A new haul cycle is started after the load has been dumped from the previous cycle. The payload meter will stay in the after_dump state for 10 seconds to confirm that the load has actually been dumped. If the current payload is less than 20% of rated load, the payload meter will switch to the tare_zone and begin calculating a new empty tare. If, after dumping, the payload has not dropped below 20% of rated load the meter will return to the maneuvering or hauling states. In this case, the false_body_up flag will be recorded in the haul cycle record.

While in the tare_zone state, and moving faster than 5 km/h (3 mph), the payload meter calculates the empty sprung weight of the truck. This tare value will be subtracted from the loaded sprung weight to calculate the final payload. The payload meter will switch from the tare_zone or empty to the loading state if swingloads are detected. By raising the dump body while in the empty state the payload meter can be manually switched back to the tare_zone to calculate a new tare.

From the empty state, the payload meter will switch to the loading state through one of two means. If the brake lock is applied, the payload meter will be analyzing the suspension pressures to detect a swingload. If a swingload is detected, the meter will switch to the loading state. The minimum size for swingload detection is 10% of rated load. Swingload detection usually takes 4-6 seconds. The second method to switch from empty to loading is through continuous loading. This can happen if the brake lock is not used during loading. If the load increases above 50% of rated load for 10 seconds without the brake lock applied, the meter will switch to loading and record the continuous_loading flag in the haul cycle.

The payload meter switches from loading to maneuvering as soon as the truck begins moving. The maneuvering zone is 160m and is designed to allow the operator to reposition the truck under the shovel. More payload can be added anytime within the maneuvering zone. Once the truck travels 160m (0.1 miles) the payload meter switches to the final_zone and begins calculating payload. If the body is raised while the payload meter is in the maneuvering state, the no_final_load flag will be recorded in the haul cycle record, no payload will be calculated, and the meter will switch to the dumping state.

While in the final_zone moving faster than 5 km/h (3 mph), the payload meter calculates the loaded sprung weight of the truck. The same advanced algorithm is used to calculate the empty and loaded sprung weights. The payload meter will switch from the final_zone to the dumping state if the Body-Up signal is received. If the truck has moved for less than 1 minute in the final_zone, the payload meter will calculate the final payload using an averaging technique which may be less accurate. If this happens, the average_load flag will be recorded in the haul cycle.

The payload meter switches to the dumping state when the dump body rises. The payload meter will switch from dumping to after_dump when the dump body comes back down.

From the after_dump, the payload meter will switch to one of three states:

1. If the average payload is greater than 20% of rated load and no final payload has been calculated, the payload meter will return to the maneuvering state. After the truck travels 160m (0.1 mile) the meter will switch to the final_zone and attempt to calculate the payload again. The false_body_up flag will be recorded in the haul cycle record.
2. If the average payload is greater than 20% of rated load and the final payload has been calculated, the payload meter will switch back to the hauling state. The false_body_up flag will be recorded in the haul cycle record.
3. If the average payload is less than 20% of rated load, the payload meter will switch to the tare_zone and begin to calculate a new empty tare.

Load Calculation

The final load calculation is different from the last swingload calculation. The accuracy of the swing load calculation depends on loading conditions and the position of the truck during loading. The last swingload calculation is not the value recorded in memory as the final load. The final load is determined by a series of calculations made while the truck is traveling to the dump site.

Carry Back

Carry back is calculated as the difference between the current truck tare and the clean truck tare. The clean truck tare is calculated using the PC software. When the suspensions are serviced or changes are made that may affect the sprung weight of the truck, a new clean truck tare should be calculated.

Measurement Accuracy

Payload measurements are typically repeatable within 1%. Accuracy for a particular scale test depends on specific combinations of pressure sensors and payload meters as well as the specifics of each scale test. Comparisons from different scale tests are often made without considering the differences introduced by the specific installation and operation of the scales for each test. In addition, each pressure sensor and payload meter introduces it's own non-linearity. Each truck becomes an individual combination of sensors and payload meter. Errors from these sources can introduce up to a ±7% bias in the payload meter calculations for a specific scale test, for an individual truck.

Because the PLMIII calculates a new empty tare for each payload, a detailed scale test must weigh the trucks empty and loaded for each haul cycle. Using a simple average of 2 or 3 empty truck weights as an empty tare for the entire scale test will introduce significant error when comparing scale weights to PLMIII weights.

SOURCES FOR PAYLOAD ERROR

Payload Error

The number one source of error in payload calculation is improperly serviced suspensions. The payload meter calculates payload by measuring differences in the sprung weight of the truck when it is empty and when it is loaded. The sprung weight is the weight of the truck supported by the suspensions. The only method for determining sprung weight is by measuring the pressure of the nitrogen gas in the suspensions. If the suspensions are not properly maintained, the payload meter cannot determine an accurate value for payload. The two critical factors are proper oil height and proper nitrogen charge.

If the suspensions are overcharged, the payload meter will not be able to determine the empty sprung weight of the truck. The suspension cylinder must be able to travel up and down as the truck drives empty. The pressure in an overcharged suspension can push the suspension rod to full extension. In this case, the pressure inside the cylinder does not accurately represent the force necessary to support that portion of the truck.

If the suspensions are undercharged, the payload meter will not be able to determine the loaded sprung weight of the truck. The suspension cylinder must be able to travel up and down as the truck drives loaded. If the pressure in an undercharged suspension cannot support the load, the suspension will collapse and make metal-to-metal contact. In this case, the pressure inside the cylinder does not accurately represent the force necessary to support that portion of the truck.

Low oil height can also introduce errors by not correctly supporting a loaded truck. This is why the correct oil height and nitrogen charge are the most critical factors in the measurement of payload. If the suspensions are not properly maintained, accurate payload measurement is not possible. In addition, suspension maintenance is very important to the life of the truck.

Loading Conditions

The final load calculation of the PLMIII system is not sensitive to loading conditions. The final load is calculated as the truck travels away from the shovel. Variations in road conditions and slope are compensated for in the complex calculations performed by the payload meter.

Pressure Sensors

Small variations in sensors can also contribute to payload calculation error. Every pressure sensor is slightly different. The accuracy differences of individual sensors along the range from 0 to 4000 psi can add or subtract from payload measurements. This is also true of the sensor input circuitry within individual payload meters. These differences can stack up 7% in extreme cases. These errors will be consistent and repeatable for specific combinations of payload meters and sensors on a particular truck.

Swingloads

Swingload calculations can be affected by conditions at the loading site. Parking the truck against the berm or large debris can cause the payload meter to inaccurately calculate individual swingloads. While the PLMIII system uses an advanced calculation algorithms to determine swingloads, loading site conditions can affect the accuracy.

Speed and Distance

The payload meter receives the same speed signal as the speedometer. This signal is a frequency that represents the speed of the truck. The payload meter uses this frequency to calculate speeds and distances. The meter assumes a single value for the rolling radius of the tire. The rolling radius may change at difference speeds by growing larger at higher speeds. The actual rolling radius of the tire will also change between a loaded and empty truck. The payload meter does not compensate for these changes.

NOTE: Earlier 730E & 830E models are subject to incorrect speed data due to electrical interference. The incorrect speeds are generated while the truck is stopped. An attenuator was added to newer production models to prevent this error from occurring. A kit was released to update older PLMIII systems with the attenuator. Consult your area service representative for details.

HAUL CYCLE DATA

PLMIII records and stores data in its on-board flash memory. This memory does not require a separate battery. The data is available through the download software.

PLMIII can store 5208 payload records. When the memory is full, the payload meter will erase the oldest 745 payload records and continue recording.

PLMIII can store 512 alarm records in memory. When the memory is full, the payload meter will erase the oldest 312 alarm records and continue recording.

All data is calculated and stored in metric units within the payload meter. The data is downloaded and stored in metric units within the Paradox database on the PC. The analysis program converts units for displays, graphs and reports.

The units noted in the Table 1 are the actual units stored in the data file. The value for the haul cycle start time is the number of seconds since January 1, 1970 to the start of the haul cycle. All other event times are referenced in seconds since the haul cycle start time. The PC download and analysis program converts these numbers into dates and times for graphs and reports.

Haul Cycle Data

The following information is recorded for each haul cycle:

Table 1: HAUL CYCLE DATA		
Data	Unit	Remark
Truck #	alpha-numeric	Up to 22 characters can be stored in this field to identify the truck. Typically this field will be just the truck number.
Haul Cycle Start Date/Time	seconds	Number of seconds from 1/1/70 to the start of the haul cycle, haul cycle starts when the meter transitions from dumping to empty state after the previous haul cycle, download program converts seconds into date and time for display
Payload	tons	Stored as metric, download program allows for conversion to short or long tons.
Number of Swingloads	number	The number of swingloads detected by the payload meter
Operator ID	number	This is a 4 digit number that can be entered by the operator at the start of the shift.
Warning Flags	alpha	Each letter represents a particular warning message about the haul cycle, details are located on page 19.
Carry-back load	tons	The difference between the latest empty tare and the clean truck tare
Empty haul time	seconds	Number of seconds in the tare_zone and empty states with the truck moving
Empty stop time	seconds	Number of seconds in the tare_zone and empty states with the truck stopped
Loading time	seconds	Number of seconds in the loading state
Loaded haul time	seconds	Number of seconds in the maneuvering, final_zone and loaded states with the truck moving
Loaded stop time	seconds	Number of seconds in the maneuvering, final_zone and loaded states with the truck stopped
Dumping time	seconds	Number of seconds in the dumping state
Loading start time	seconds	Number of seconds from the start of the haul cycle to when the meter transitions from empty to loading state
Dump start time	seconds	Number of seconds from the start of the haul cycle to the time when the meter switches from loaded to dumping state
Loaded haul distance	m	Distance traveled while loaded
Empty haul distance	m	Distance traveled while empty
Loaded max speed	km/h	Maximum speed recorded while the truck is loaded
Loaded max speed time	seconds	Number of seconds from the start of the haul cycle to the time when the max speed occurred
Empty max speed	km/h	Maximum speed recorded while the truck is empty
Empty max speed time	seconds	Number of seconds from the start of the haul cycle to the time when the max speed occurred
Peak positive frame torque	ton-meter	Positive frame torque is measured as the frame twists in the clockwise direction as viewed from the operator’s seat.
Peak frame torque time	seconds	Number of seconds from the start of the haul cycle to the peak torque, download program converts to time for display
Peak negative frame torque	ton-meter	Negative frame torque is measured as the frame twists in the counter-clockwise direction as viewed from the operator's seat.
Peak frame torque time	seconds	Number of seconds from the start of the haul cycle to the peak torque, download program converts to time for display
Peak sprung load	tons	Peak dynamic load calculation
Peak sprung load time	seconds	Number of seconds from the start of the haul cycle to the peak instantaneous load calculation
Front-left tire-ton-km/h	t-km/h	Tire ton-km/h for haul cycle
Front-right tire-ton-km/h	t-km/h	Tire ton-km/h for haul cycle
Average rear tire-ton-km/h	t-km/h	Tire ton-km/h for haul cycle
Truck Frame Serial Number	alpha	The truck serial number from the nameplate on the truck frame
Reserved 1-10	number	These values are internal calculations used in the continued development of the PLMIII system and should be ignored

Haul Cycle Warning Flags

The payload meter expects haul cycles to progress in a particular way. When something unexpected takes place, the system records a warning flag. Several events within the haul cycle can cause a warning flag to be generated. Each one indicates an unusual occurrence during the haul cycle. They do not necessarily indicate a problem with the payload meter or payload calculation.

A: Continuous Loading

This message is generated when the truck is loaded over 50% full without the payload meter sensing swingloads. This indicates that a continuous loading operation was used to load the truck. It may also indicate that the payload meter did not receive the brake lock input while the truck was being loaded. There may be a problem with the wiring or the brake lock was not used. The payload meter will not measure swingloads unless the brake lock is used during the loading process.

B: Loading to Dumping Transition

This message is generated when the payload meter senses a body up input during the loading process. This message is usually accompanied by a no_final_load flag.

C: No Final Load

This message is generated when the payload meter is unable to determine the final payload in the truck. Typically, this means that the payload meter switched from a loaded state to the dumping state before the load could be accurately measured.

D: Maneuvering to Dumping Transition

This message is generated when the payload meter senses a body-up input during the maneuvering or repositioning process indicating that the operator has dumped the load. It may also be generated if the body-up signal is not properly reaching the payload meter and the weight in the truck falls dramatically while the truck is maneuvering or repositioning.

E: Average Load or Tare Used

This message indicates that the recorded payload may not be as accurate as a typical final load calculation. Typically, this is recorded when loading begins before an accurate tare is calculated or the load is dumped before the load can be accurately measured.

F: Final Zone to Dumping Transition

This message is generated when the payload meter senses a body-up while it is calculating the final payload indicating that the operator has dumped the load. It may also be generated if the body-up signal is not properly reaching the payload meter and the weight in the truck falls dramatically while the truck is calculating the final payload.

H: False Body Up

This message indicates that the body was raised during the haul cycle without the load being dumped. The body-up signal indicated that the truck was dumping, but the weight of the truck did not fall below 20% of the rated load.

I: Body Up Signal Failed

This message indicates that the load was dumped without a body-up signal being received by the payload meter. The weight of the truck fell below 20%, but the payload meter did not receive a body-up signal from the sensor.

J: Speed Sensor Failed

This message indicates that the payload meter sensed the truck loading and dumping without receiving a speed signal.

K: New Tare Not Calculated

The payload meter was not able to accurately calculate a new empty sprung weight for the truck to use as the tare value for the haul cycle. The tare value from the last haul cycle was used to calculate payload.

L: Incomplete Haul Cycle

The payload meter did not have proper data to start the haul cycle with after powering up. When the PLMIII powers off, it records the data from the haul cycle in progress into memory. This flag indicates that this data was not recorded the last time the payload meter was shut down. This can happen when the main battery disconnect is used to shut the truck down instead of the keyswitch. A haul cycle with this warning flag should not be considered accurate. Haul cycles with this warning are displayed in red on the Payload Summary window and are not included in the summary statistics for reports or display.

M: Haul Cycle Too Long

The haul_cycle_too_long flag indicates that the haul cycle took longer than 18.2 hours to complete. The times stored for particular events may not be accurate. This does not affect the payload calculation.

N: Sensor Input Error

An alarm was set for one of the 5 critical sensor inputs during the haul cycle. The five critical sensors are the four pressure sensors and the inclinometer. Without these inputs, the payload meter cannot calculate payload. A haul cycle with this warning flag should not be considered accurate. Haul cycles with this warning are displayed in red on the Payload Summary window and are not included in the summary statistics for reports or display.

Frame Torque Data

Payload meter records the top 5 peak positive and negative frame torque values and the time they occurred. The frame torque is a measure of the twisting action along the centerline of the truck. Positive frame torque is measured when the suspension forces on the front of the truck act to twist the frame in the clockwise direction as viewed from the operator's seat. Negative frame torque is measured when the forces from the suspensions act in the opposite direction.

For example, if the left front and right rear pressure rises as the right front and left rear pressure drops, the truck frame experiences a twisting motion along the longitudinal centerline. In this case, the payload meter will record a positive frame torque.

The 5 highest values in the positive and negative direction are stored in permanent memory within the payload meter.

Sprung Weight Data

The payload meter is constantly monitoring the live payload calculation. This value naturally rises and falls for a loaded truck depending on road and driving conditions. The payload meter records the top 5 highest payload calculations and the time they occurred. This information is stored in permanent memory inside the meter.

Maximum Speed Data

The payload meter records the top 5 highest speeds and the time they occurred. This information is stored in permanent memory inside the meter.

Alarm Records

The payload meter stores alarm records to give service personnel a working history of the system. All codes are viewed using the PC connected to the payload meter. Active codes are also displayed on the two-digit display on the meter itself. Each code has a specific cause and should lead to an investigation for correction. Some failures can be overcome by the payload meter. Haul cycle data will indicate if an alarm condition was present during the cycle. Failures with the suspension or inclinometer sensors cannot be overcome.

Fault Code Data

Table 2:		
Fault Code	**Name**	**Description**
1	Left front pressure high	Input current > 22 ma
2	Left front pressure low	Input current < 2 ma
3	Right front pressure high	Input current > 22 ma
4	Right front pressure low	Input current < 2 ma
5	Left rear pressure high	Input current > 22 ma
6	Left rear pressure low	Input current < 2 ma
7	Right rear pressure high	Input current > 22 ma
8	Right rear pressure low	Input current < 2 ma
9	Inclinometer high	Input voltage < 0.565 vdc
10	Inclinometer low	Input voltage > 5.08 vdc
11	Speed input failure	Not Used
12	Brake lock input failure	Not Used
13	Body-up input failure	Payload meter detected dumping activity without receiving a body up signal
16	Memory write failure	Indicates possible memory problem at power start up. Cycle power and recheck.
17	Memory read failure	Indicates possible memory problem at power start up. Cycle power and recheck.
18	Rear right suspension flat	Payload meter detected an undercharged suspension condition on the rear right suspension.
19	Rear left suspension flat	Payload meter detected an undercharged suspension condition on the rear left suspension.
20	Time change	Payload meter time was changed by more than 10 minutes. The Alarm Set time indicates original time. The Alarm Clear time indicates the new time.
21	Tare value reset	The user manually forced the payload meter to reset the haul cycle empty (tare) sprung weight. This forced the meter into the tare_zone state and lost all data for the previous haul cycle.
22	Excessive carryback	The payload meter detected an empty carryback load in excess of the user-defined carryback threshold on two consecutive haul cycles.
26	User switch fault - SELECT	Select switch on for more than 2 minutes, may indicate short to ground
27	User switch fault - SET	Set switch on for more than 2 minutes, may indicate short to ground

PC SOFTWARE OVERVIEW

PC Overview

The PC software has several basic functions:

- Configure the PLMIII system on the truck.
- Troubleshoot and check the PLMIII system.
- Download data from the PLMIII system.
- Analyze data from the payload systems.

Configuration, troubleshooting and downloading require a serial connection to the payload meter on the truck. Analysis can be done at any time without a connection to the payload meter.

Payload data is downloaded from several trucks into one database on the PC. The database can be queried to look at the entire fleet, one truck or truck model. The data can be graphed, reported, imported or exported. The export feature can take payload data and save it in a format that spreadsheet programs like Excel or word processing programs can easily import.

System Configuration

PLMIII needs to be configured for operation when it is first installed on the truck. This process requires several steps and uses the laptop computer to make the necessary settings. The setup procedure can be broken down into several steps:

- Connecting the laptop to the PLMIII system.
- Starting communications
- Setting the time & date
- Setting the truck type
- Setting the truck ID
- Setting the speedometer/display gauge units

Installing the PLMIII Software

The CD ROM containing the Payload Data Management (PDM) Software will automatically begin installation when it is inserted into the drive on the PC. If this does not happen, the software can be installed by running the Setup.exe program on the CD ROM.

The minimum PC requirements for running the software is a Pentium 133Mhz with 64 MB of ram and at least 300 MB of free hard drive space available. For improved performance, the recommended PC would be a Celeron, AMD K6-2 or better processor with 128 MB of ram running at 400 Mhz. The PDM Software uses a powerful database to manipulate the large amounts of data gathered from the PLMIII system. Using a more powerful computer and added memory to run the software can result in a significant improvement in performance. The software is written to use a minimum 800x600 screen resolution.

DOWNLOADING DATA

PLMIII records many types of data. The PLMIII PC software is designed to download the data from a whole truck fleet. Instead of creating one data file for each truck, the PC software combines all the data from many trucks into one database on the hard drive of the computer. The software then allows users to query the database to create custom reports and graphs. Data for individual trucks or groups of trucks can be easily analyzed. This same data can be exported for use in other software applications like word processors and spreadsheet applications.

As the database grows, performance of the PC software for analysis will slow down. It may be helpful to periodically export data. For example, query the database to show the oldest quarter, month, or half year and print out a summary report. Then export the data to a compressed format and save the file in a secure location. Once the data is exported, delete the entire query results from the database. If necessary, the data can easily be imported back into the main database for analysis at a future date. Removing this older data will improve performance.

The PC software downloads the data from the payload meter into a single Paradox database. The data from all the trucks is added to the same database. Downloading the payload meter can take several minutes. The data is added to the database on the laptop used to download.

To move the data to another computer, a query must be run to isolate the particular data for export. Do not press the operator switch on the dashboard while downloading

To download the payload meter:

1. Connect to the payload meter and start the PC software.
2. From the main menu, select "Connect to Payload Meter". The PC will request the latest status information from the payload meter. The number of haul cycles and alarms will be displayed.
3. Select the " Begin Download" button. The PC will request the payload and alarm data from the payload meter and save it into the database. This may take several minutes. A progress bar at the bottom will show the approximate time left.

PLM III SYSTEM CONFIGURATION

Starting Communications

The PDM software allows users to download and configure the system.

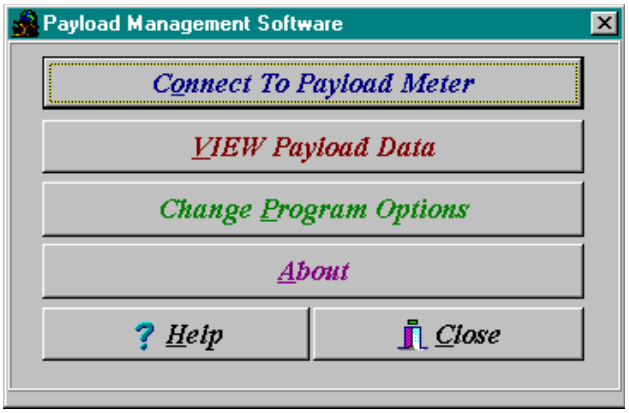

Before connecting to the payload meter, select "Change Program Options" and confirm that the program has selected the correct laptop serial port. Most laptops use Comm 1 for serial communications. The units displayed for reports and graphs by the PC software can be set on this form. Click “Done” to return to the main menu.

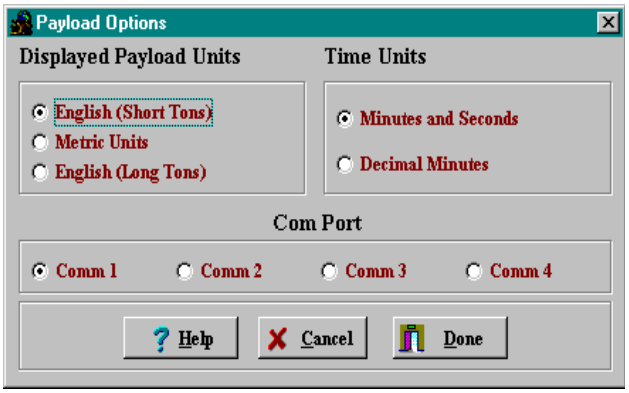

From the main menu, click the "Connect to Payload Meter" button. The PC will try to connect to the payload meter and request basic information from the system. In the event of communications trouble, the PC will try 3 times to connect before "timing-out". This may take several seconds.

Displayed Payload Units

Three options are available for the display of units in the PC software, reports, and graphs:

Short Tons: Payload is displayed in short tons, distances and speeds will be displayed in Miles

Metric Tons: Payload is displayed in metric tons, distances and speeds are displayed in Kilometers

Long Tons: Payload is displayed in long tons, distances and speeds are displayed in Miles

Time Units

Minutes and Seconds Example:
Five minutes and thirty-two seconds = 5:32

Decimal Minutes Example:
Five minutes and thirty-two seconds = 5.53

Connection Menu

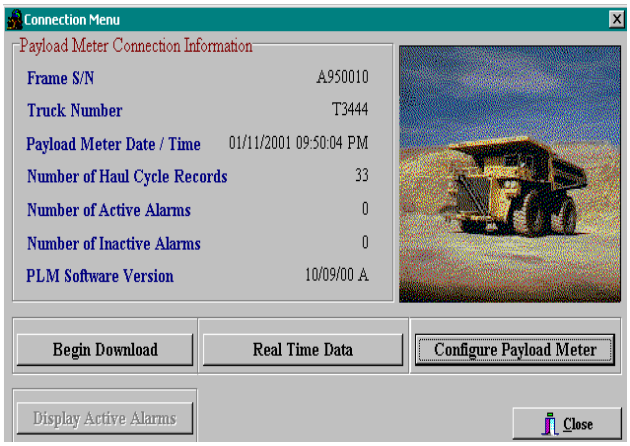

The connection screen displays basic system information to the user.

- Frame S/N should agree with the truck serial number from the serial plate located on the truck frame.
- Truck Number is an ID number assigned to the truck by the mine.
- The Payload Meter Date / Time values come from the payload meter at the moment of connection.
- Number of Haul Cycle Records is the number of haul cycles records stored in memory and available for download.
- Number of Active Alarms shows how many alarms are currently active in the system at the time of connection. If there are active alarms, the "Display Active Alarms" button is available.
- Number of Inactive Alarms shows how many alarms have been recorded in memory and are available for download.
- PLM Software Version displays the current version of software in the payload meter.

The information on the connection menu comes from the configuration of the payload system on the truck.

There are also many configuration and download options available from this screen. The Connection Menu is updated only when the connection is first made. It does not update automatically. To view changes made while connected, the user must close the window and reconnect to the payload meter.

The connection menu is displayed after a serial connection has been established and the PC software has connected to the payload meter.

Connecting to the Payload Meter

Communications to the PLMIII requires a laptop computer running the PDM software. The software connects to the payload meter through the meter's serial port #1. This is the same port used by the speedometer/display gauge. When the laptop is using the serial port, the lower display on the operator gauge on the dashboard will be blank. This does not affect the operation of the speedometer.

- Connect the laptop to the system using the EF9160 communications harness. The download connector is typically located on the housing mounted in the cab to the back wall. The PLMIII system uses the same connection as the Payload Meter II system.

Configure the Payload Meter

Configuration of the payload meter requires a serial connection to the PLMIII system. Clicking the "Configure Payload Meter" button will bring up the Truck Configuration screen and menu. This screen displays the latest configuration information stored on the payload meter.

When changes are made to the configuration, the "Save Changes" button must be pressed to save the changes into the payload meter. To confirm the changes, exit to the main menu and re-connect to the payload meter.

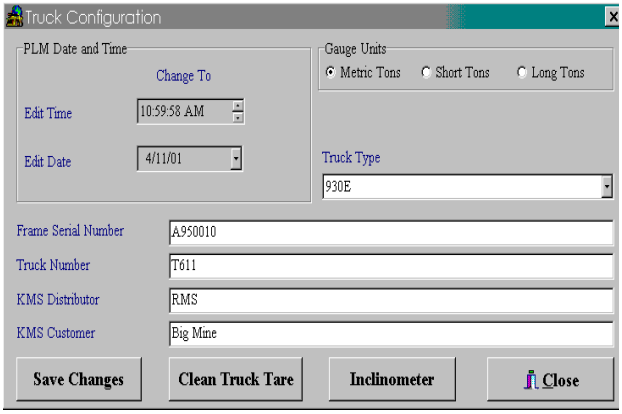

Setting the Date and Time

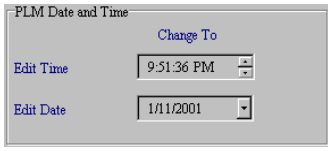

The time shown on the form is the time transmitted from the payload when the connection was first established.

The date and time are maintained by a special chip on the PLMIII circuit board. The memory for this chip is maintained by a very large capacitor when the power is removed from the payload meter. This will maintain the date and time settings for approximately 30 days. After this time, it is possible for the payload meter to lose the date and time setting. It is recommended that the system be powered every 20 days to maintain the date and time. If the date and time is lost, simply reset the information using this procedure. It takes approximately 90 minutes to recharge the capacitor.

Changing the date and time will affect the haul cycle in progress and may produce unexpected results in the statistical information for that one haul cycle.

To change the time:

1. Click on the digit that needs to be changed.
2. Use the up/down arrows to change or type in the correct value.
3. Press the "Save Changes" button to save the new time in the payload meter.

To change the date:

1. Click on the digit that needs to be changed.
2. Type in the correct value or use the pull-down calendar to select a date.
3. Press the "Save Changes" button to save the new time in the payload meter.

Setting the Truck Type

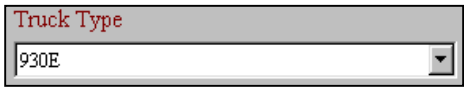

1. From the Truck Configuration screen, use the pull-down menu to select the truck type that the payload meter is installed on.
2. Press the "Save Changes" button to program the change into the meter.

Setting the Gauge Display Units

The payload meter speedometer / display gauge displays the speed on the upper display. The units for the speed display are selected using a jumper on the rear of the case.

The payload units on the lower display can be changed from metric to short tons or long tons using the Truck Configuration screen. This selection also switches between metric (kg/cm^2) and psi (lbs/in^2) for the live display of pressure on the gauge.

1. From the Truck Configuration screen, select the payload units to be used on the lower display of the speedometer/display gauge.
2. Press the "Save Changes" button to program the change into the payload meter.

Setting the Frame Serial Number

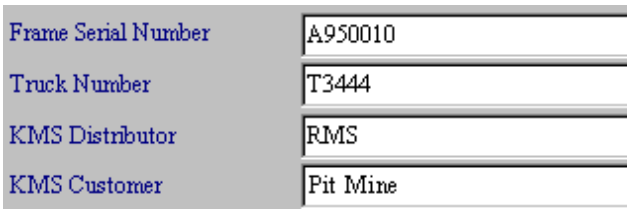

The frame serial number is located on the plate mounted to the truck frame. The plate is outboard on the lower right rail facing the right front tire. It is very important to enter the correct frame serial number. This number is one of the key fields used within the haul cycle database. The field will hold 20 alpha-numeric characters.

1. On the Truck Configuration screen, enter the truck frame serial number in the appropriate field.
2. Press the "Save Changes" button to program the change into the payload meter.

Setting the Truck Number

Most mining operations assign a number to each piece of equipment for quick identification. This number or name can be entered in the Truck Number field. It is very important to enter a unique truck number for each truck using the PLMIII system. This number is one of the key fields used within the haul cycle database. The field will hold 20 alpha-numeric characters.

1. On the Truck Configuration screen, enter the truck number in the appropriate field.
2. Press the "Save Changes" button to program the change into the payload meter.

Setting the Komatsu Distributor

This field in the haul cycle record can hold the name of the Komatsu distributor that helped install the system. Komatsu also assigns a distributor number to each distributor. This number is used on all warranty claims. This Komatsu distributor number can also be put into this field. The field will hold 20 alpha-numeric characters.

1. On the Truck Configuration screen, enter the distributor name or number in the appropriate field.
2. Press the "Save Changes" button to program the change into the payload meter.

Setting the Komatsu Customer

This field in the haul cycle record can hold the name of the mine or operation where the truck is in service. Komatsu also assigns a customer number to each customer. This number is used on all warranty claims. This Komatsu customer number can also be put into this field. The field will hold 20 alpha-numeric characters.

1. On the Truck Configuration screen, enter the customer name or number in the appropriate field.
2. Press the "Save Changes" button to program the change into the payload meter.

Clean Truck Tare

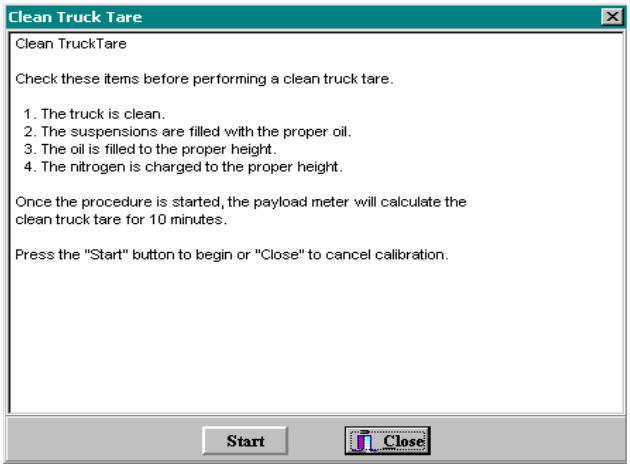

The payload meter uses the clean truck tare value to calculate carry-back load for each haul cycle. The carry-back stored in the haul cycle record is the new empty tare minus the clean truck tare.

This procedure should be performed after service to the suspensions or when significant changes are made to the sprung weight of the truck. Before performing this procedure, be sure the suspensions are properly filled with oil and charged. It is critical to payload measurement that the proper oil height and gas pressure be used.

Once the clean tare process is started, the payload meter will begin to calculate the clean empty sprung weight of the truck. This calculation continues while the truck drives to the next loading site. Once the procedure is started, there is no reason to continue to monitor the process with the PC. The truck does not need to be moving to start this procedure.

1. After cleaning debris from the truck and checking to see that the suspensions are properly serviced, use the PLMIII software to connect to the payload meter.
2. From the "Truck Configuration" screen, select "Clean Truck Tare".
3. Be sure to follow the screen instructions.

Inclinometer Calibration

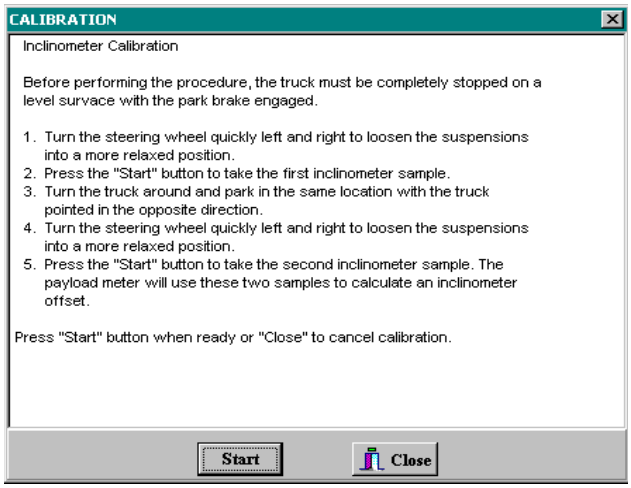

The inclinometer calibration procedure is designed to compensate for variations in the mounting attitude of the inclinometer. The inclinometer input is critical to the payload calculation.

This procedure should be performed on relatively flat ground. Often the maintenance area is an ideal location for this procedure.

1. After cleaning debris from the truck and checking to see that the suspensions are properly serviced, use the PLMIII software to connect to the payload meter.
2. From the "Truck Configuration" screen, select "Inclinometer".
3. With the truck stopped and the brake lock on, press the “Start” button. This instructs the payload meter to sample the inclinometer once.
4. Turn the truck around. Drive the truck around and park in the exact same spot as before, facing the other direction.
5. With the truck stopped and the brake lock on, press the “Start” button. This instructs the payload meter to sample the inclinometer again. The payload meter will average the two samples to determine the average offset.
6. Be sure to follow the screen instructions.

DATA ANALYSIS

PAYLOAD SUMMARY FORM

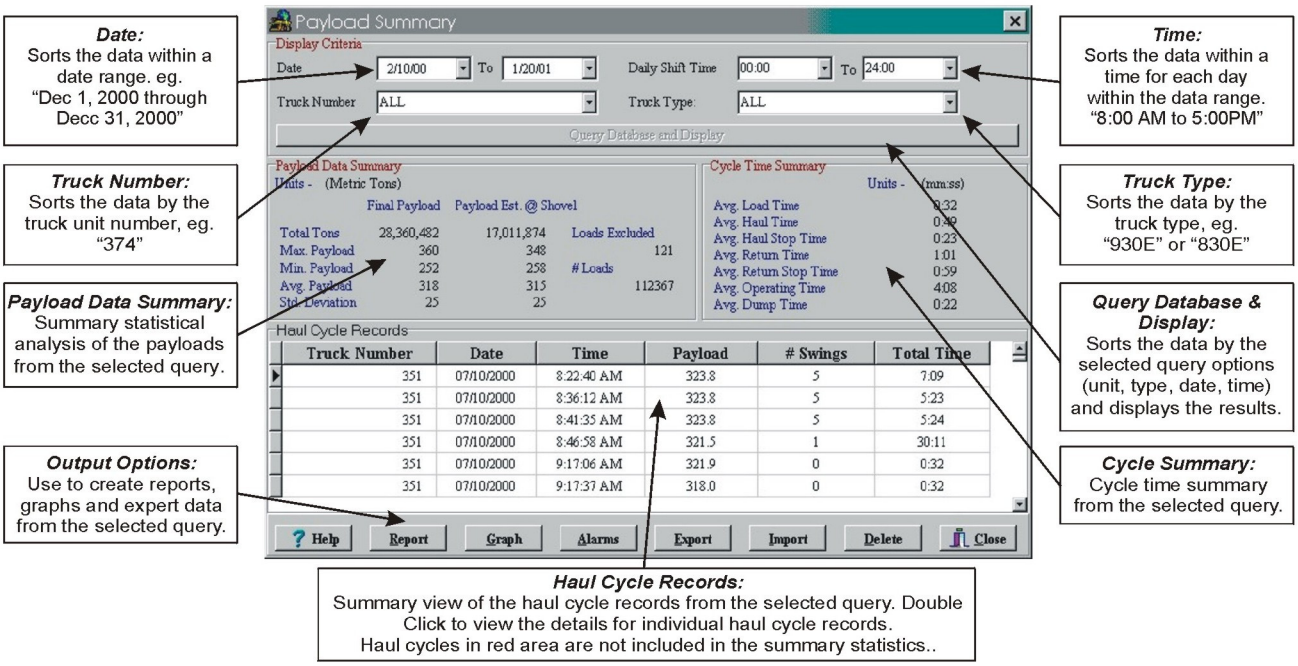

The data analysis tools allow the user to monitor the performance of the payload systems across the fleet. Analysis begins when the "View Payload Data" button is pressed. This starts an "all trucks, all dates, all times" query of the database and displays the results in the Payload Summary Form.

The user can change the query by changing the dates, times, or trucks to include in the query for display.

Haul cycles in the data grid box at the bottom can be double-clicked to display the detailed results of that haul.

Creating a Query

The program defaults to show all trucks, all types, all dates and all times for the initial query. The display can be narrowed by selecting which trucks or types to view and for what dates and times.

The query items are added in the "AND" condition. If the user selects a truck # and date range, the query will sort the data for that truck number AND the date range.

Sorting on Truck Unit Number

The truck unit number is the truck unit number entered into the payload meter when it was configured at installation. The query can be set to look for all trucks or one particular truck number. When the program begins, it searches through the database for all the unique truck numbers and creates a list to select from.

Choosing one particular truck number will limit the data in the displays, summaries and reports to the one selected truck. To create reports for truck number 374, select 374 from the pull-down menu and hit the "Query Database and Display" button.

Sorting on Truck Type

The truck type is the size of the truck from the family of Komatsu trucks. This allows the user to quickly view results from different types of trucks on the property. For example, a separate report can be generated for 830E and 930E trucks.

Sorting on Date Range

The default query starts in 1995 and runs through the current date on the PC. To narrow the range to a specific date, change the “From” and “To” dates.
For example, to view the haul cycle reports from truck 374 for the month of July, 2000:

1. Select truck 374 from the Truck Unit pull-down menu.

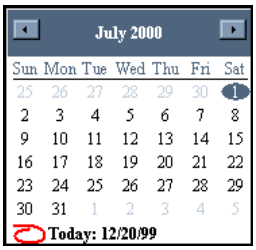

2. Change the “From” date to July 1, 2000.

3. Change the “To” date to July 31, 2000.
4. Press the "Query Database and Display" to view the results.

Sorting on Time Range

The time range sorts the times of the day for valid dates. Changing the time range to 6:00AM to 6:00PM will limit the payloads displayed to the loads that occurred between those times for each day of the date range. Times are entered in 24:00 format. To view the haul cycle reports from the first shift for truck 374 from January 5, 2000 to January 8, 2000:

1. Select truck 374 from the Truck Unit pull-down menu.

2. Change the “From” date to July 1, 2000.

3. Change the “To” date to July 31, 2000.
4. Change the “From” time to 06:00.
5. Change the “To” time to 18:00.

6. Press the "Query Database and Display" to view the results.

This query will display haul cycles from January 5 to January 8, from 6:00 AM to 6:00 PM.

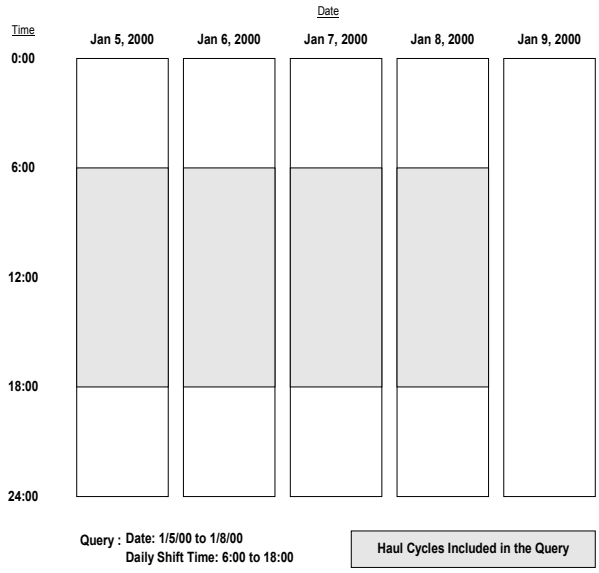

The shift times selected can extend the query past the original date. If the dates set for the query are January 5 to January 8 and the times were changed to query the 6:00 PM (18:00) to 6:00 AM (06:00) shift, the results would extend into the morning of the 9th. This can been seen in the following example:

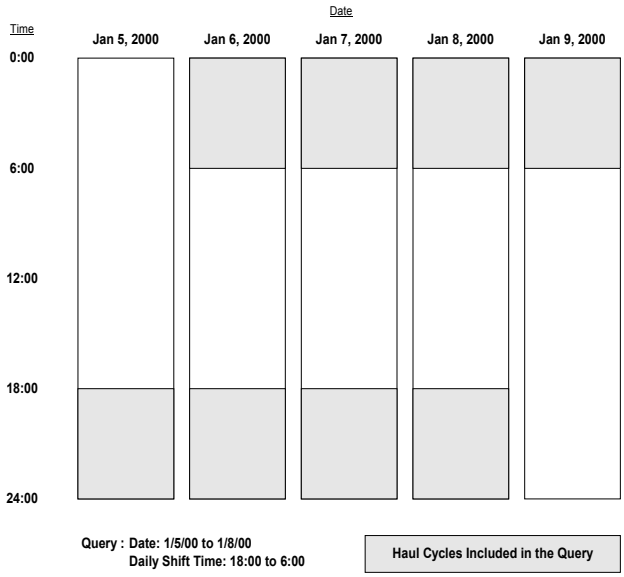

Creating Reports

Reports can be generated and viewed on the screen or printed. These reports are generated from the query displayed on the Payload Summary Screen. From the example in "Sorting on Time Range", the report printed would only contain data from truck 374 during the month of July 2000, from 8:00 AM to 5:00 PM.

It is important to carefully select the query data and press the "Query Database & Display" button before printing a report.

Payload Detail Screen

The Payload Detail screen gives the details for any individual haul cycle. From the “Payload Summary” screen, double-click on any haul cycle to display the detail.

NOTE: Some haul cycles may contain the Sensor Input warning flag. This indicates that one of the four pressure sensors or inclinometer was not functioning properly during the haul cycle. Haul cycles with this warning are displayed in red on the Payload Summary window and are not included in the summary statistics for reports or display.

Summary - one page report

A summary of the queried data can be printed onto 1 page. The cycle data is summarized onto one sheet. Displayed is the speeds, cycle times, load statistics, frame and tire data.

Detailed - multi-page report

The detail report starts with the summary report and follows with pages of data for each haul cycle. The detailed report prints date, time, payload, cycle times, and cycle distances, speeds and the number of swing loads.

Payload Summary Report
Report Date: April 11, 2001
Query used for summary:
Truck Number: ALL
Truck Type: ALL
Dates: 2/10/00 to 2/19/01
Daily Shift Time: 00:00 to 24:00

Time Period	Date	Time
First Load	02/10/2000	03:25:30 PM
Last Load	02/19/2001	07:20:30 AM

Cycle Distance Averages	(miles)
Loaded	1.9
Empty	2.0
Avg Total Distance	3.9

Payload Data	Short Tons	Date	Time
Final Payload			
Total, All Loads	1,495,086		
Maximum	421	01/24/2001	09:05:22 AM
Minimum	0	01/27/2001	04:11:24 AM
Average	321		
Standard Deviation	28.6		
Payload Estimate @ Shovel			
Total, All Loads	1,532,025		
Maximum	425	01/11/2001	06:45:58 PM
Minimum	250	02/11/2000	06:27:34 AM
Average	320		
Standard Deviation	36.3		
Number of Loads	4,654		
Avg Carry Back	2.2		

Cycle Time Averages	(Min:Sec)
Load	2:34
Haul Run	9:48
Haul Stop	1:08
Empty Run	6:09
Empty Stop	4:19
Dump	1:17
Avg Total Cycle Time	25:17

Avg Tire	(Ton-MPH)
Left Front	583
Right Front	576
Rear	415

Speed Data	(mph)
Loaded Max	37.32
Loaded Avg	10.57
Empty Max	37.97
Empty Avg	11.43

Payload Detail Report **Page 1**
Report Date: October 17, 2000
Query used for summary:
Truck Number: ALL
Truck Type: ALL
Dates: 8/28/00 to 10/3/00
Daily Shift Time: 00:00 to 24:00

					CYCLE Times(min:sec)							CYCLE DISTANCE(mi.)			SPEEDS(mph)			
No.	Date	Time	Payload S.Tons	#Swings	Load	Haul	Haul Stop	Dump	Return	Return Stop	Total	Haul	Return	Total	Max.	Haul Avg.	Max.	Return Avg.
1	8/28/00	3:54P	347	7	4:40	11:11	0:06	0:52	7:54	14:28	39:11	1.9	2.0	4.0	21.99	10.14	31.03	5.48
2	8/28/00	5:18P	301	6	3:39	11:10	0:25	0:43	8:12	3:43	27:52	1.9	1.9	3.8	23.02	9.91	26.05	9.42
3	8/28/00	5:46P	300	6	3:32	11:32	2:32	0:56	7:07	0:09	25:48	1.9	1.9	3.8	23.02	8.30	25.02	15.49
4	8/28/00	6:11P	330	4	1:58	17:51	2:49	1:58	11:34	1:41	37:51	3.9	2.6	6.5	36.21	11.37	24.07	11.73
5	8/28/00	6:49P	344	4	1:54	18:26	13:04	1:50	11:20	0:24	46:58	4.0	3.9	7.9	34.97	7.56	37.06	20.15
6	8/28/00	7:36P	380	5	2:12	19:52	1:07	1:39	11:32	0:48	37:10	4.0	4.0	8.0	30.00	11.28	34.03	19.59
7	8/28/00	8:13P	352	4	2:26	18:17	0:23	1:54	11:54	1:56	36:50	3.9	4.0	8.0	31.97	12.62	34.07	17.49
8	8/28/00	8:50P	356	4	1:56	18:52	0:21	1:55	11:59	0:38	35:41	4.0	4.0	8.0	36.17	12.34	36.21	19.09
9	8/28/00	9:25P	370	5	2:18	16:17	2:18	0:53	12:25	0:25	34:36	2.7	4.1	6.7	34.97	8.55	36.17	19.14
10	8/28/00	10:00P	363	5	3:07	16:56	5:48	0:52	9:02	0:33	36:18	2.7	2.7	5.3	32.97	6.99	32.97	16.61
11	8/28/00	10:36P	341	7	3:58	12:23	0:23	0:53	7:26	0:57	26:00	2.0	2.0	3.9	21.03	9.20	32.00	14.10
12	8/28/00	11:02P	321	4	2:24	16:19	5:06	0:50	10:17	1:05	36:01	2.7	2.6	5.3	34.03	7.49	31.97	13.71
13	8/28/00	11:38P	316	5	2:49	15:21	7:06	0:58	13:01	13:11	52:26	3.9	4.0	7.9	40.12	10.30	40.12	9.16
14	8/29/00	12:56A	320	5	2:23	15:18	0:07	0:55	13:16	11:43	43:42	3.9	3.8	7.7	36.21	14.99	41.10	9.18
15	8/29/00	1:40A	302	4	1:55	14:12	0:08	0:54	10:34	0:11	27:54	3.9	3.9	7.7	40.12	16.15	41.10	21.64
16	8/29/00	2:08A	310	5	2:21	15:14	4:55	1:01	9:46	4:59	38:16	3.9	3.9	7.7	40.12	11.51	41.16	15.67
17	8/29/00	2:46A	318	5	2:25	14:44	0:15	0:54	10:36	0:19	29:13	3.9	3.9	7.7	41.10	15.50	41.10	21.28
18	8/29/00	3:15A	278	4	2:01	15:53	1:12	0:46	10:38	2:08	32:38	4.3	3.8	8.1	38.13	15.06	41.10	18.05
19	8/29/00	3:48A	328	5	2:25	17:38	3:08	0:57	10:07	0:20	34:35	4.3	3.9	8.2	34.03	12.41	41.10	22.19
20	8/29/00	4:22A	287	4	2:49	17:00	15:44	1:02	11:59	4:49	53:23	4.3	4.0	8.2	40.12	7.87	41.10	14.09
21	8/29/00	1:41P	285	4	2:15	16:08	6:14	5:21	9:02	14:43	53:43	4.0	3.0	6.9	34.97	10.58	34.03	7.55
22	8/29/00	2:50P	340	7	3:38	10:14	0:06	0:54	8:41	7:10	30:43	1.8	3.3	5.2	27.07	10.54	39.07	12.65
23	8/29/00	3:20P	326	5	3:32	9:47	0:08	1:09	5:21	0:16	20:13	1.8	1.8	3.6	27.05	10.98	30.02	18.98
24	8/29/00	3:41P	342	6	3:59	11:24	0:08	0:47	19:49	15:18	51:25	1.9	6.2	8.1	23.02	10.02	32.00	10.56
25	8/29/00	4:43P	349	7	4:46	11:12	0:18	0:57	7:32	3:12	27:57	1.8	1.9	3.8	23.02	9.50	27.07	10.87
26	8/29/00	5:11P	322	4	2:11	5:29	19:58	1:29	15:38	59:19	104:04	1.1	5.1	6.1	42.20	2.52	42.20	4.05
27	8/30/00	4:27A	330	7	4:27	10:33	0:09	1:02	21:08	159:27	196:46	1.7	4.3	6.0	23.02	9.69	28.01	1.42
28	8/30/00	4:55P	320	6	3:52	10:42	0:14	1:00	5:43	1:42	23:13	1.7	1.7	3.4	24.07	9.55	29.06	13.47
29	8/30/00	5:18P	338	6	3:16	10:45	0:51	0:58	6:00	2:34	24:24	1.7	1.6	3.3	23.02	8.71	29.04	11.36
30	8/30/00	5:42P	343	6	3:52	10:28	0:08	1:01	6:06	0:25	22:00	1.7	1.6	3.3	24.08	9.57	28.03	14.70

Creating Graphs

The PLMIII software can generate graphs that quickly summarize payload data. These graphs can be customized for printing. Just like the reports, the graphs are generated from the query displayed on the “Payload Summary” screen. From the "Sorting on Time Range" example, the graph that is printed would only contain data from truck 374 during the month of July 2000, from 8:00 AM to 5:00 PM.

It is important to carefully select the query data and press the "Query Database & Display" button before creating a graph.

1. From the Payload Summary Screen select the “Graph” button at the bottom. The Histogram Setup screen will display

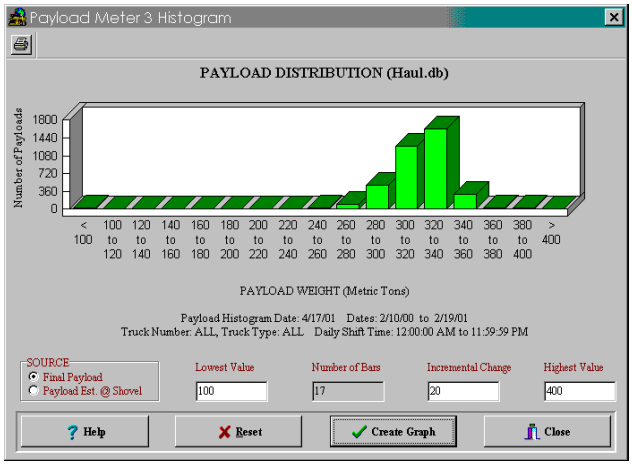

2. Enter the "Lowest Value". This will be the lowest payload on the graph. Any payloads less than this value will be summed in the first bar.
3. Enter the "Highest Value". This will be the highest value on the graph. Payloads over this value will be summed in the last bar.
4. Enter the "Incremental Change". This will determine the number of bars and the distance between them. The program limits the number of bars to 20. This allows graphs to fit on the screen and print onto 1 page.
5. Press the “Create Graph” button.

The graph will be displayed based on the query settings from the Payload Summary screen. The graph can be customized and printed.

Exporting Data

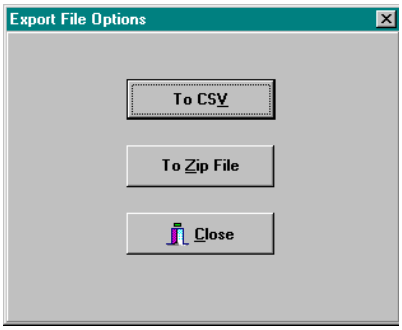

The data from the database can be exported for use with other software applications. The data is selected from the currently displayed query. The exported data can be put into a ".CSV" file or a compressed ".zip" file.

- The “.CSV” format allows data to be easily imported into spreadsheet applications and word processing applications.
- The “.Zip” format allows data to be transferred from one computer to the PDM Software database on another computer. This offers a compact way to transfer data from one computer to another.

CSV Export

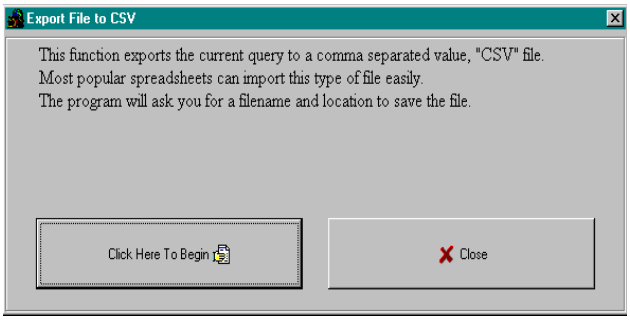

CSV stands for Comma Separated Value. This is an ASCII text file format that allows spreadsheet applications like Excel and Lotus 123 to import data easily. To export the data into a ".csv" file, press the "Export" button at the bottom of the payload summary screen and select "To CSV". The program will request a filename and location for the file.

.

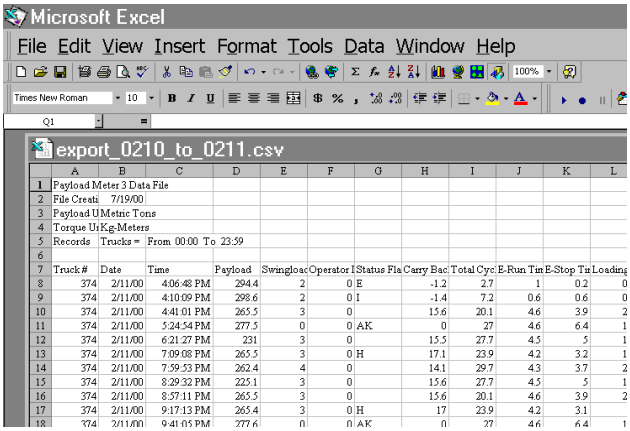

	A	B	C	D	E	F	G	H	I	J	K	L
1	Payload Meter 3 Data File											
2	File Creati	7/19/00										
3	Payload U	Metric Tons										
4	Torque Ui	Kg-Meters										
5	Records	Trucks =	From 00:00 To 23:59									
6												
7	Truck #	Date	Time	Payload	Swingloac	Operator I	Status Fla	Carry Bac	Total Cyc	E-Run Tin	E-Stop Tir	Loading
8	374	2/11/00	4:06:48 PM	294.4	2	0	E	-1.2	2.7	1	0.2	0
9	374	2/11/00	4:10:09 PM	298.6	2	0	I	-1.4	7.2	0.6	0.6	0
10	374	2/11/00	4:41:01 PM	265.5	3	0		15.6	20.1	4.6	3.9	2
11	374	2/11/00	5:24:54 PM	277.5	0	0	AK	0	27	4.6	6.4	1
12	374	2/11/00	6:21:27 PM	231	3	0		15.5	27.7	4.5	5	1
13	374	2/11/00	7:09:08 PM	265.5	3	0	H	17.1	23.9	4.2	3.2	1
14	374	2/11/00	7:59:53 PM	262.4	4	0		14.1	29.7	4.3	3.7	2
15	374	2/11/00	8:29:32 PM	225.1	3	0		15.6	27.7	4.5	5	1
16	374	2/11/00	8:57:11 PM	265.5	3	0		15.6	20.1	4.6	3.9	2
17	374	2/11/00	9:17:13 PM	265.4	3	0	H	17	23.9	4.2	3.1	
18	374	2/11/00	9:41:05 PM	277.6	0	0	AK	0	27	4.6	6.4	1

Two sets of data are exported. At the top of the file will be the haul cycle data. The columns, left to right are:

- Truck number
- Haul cycle start date
- Haul cycle start time
- Payload
- Swingloads
- Operator ID
- Warning Flags
- Carry Back
- Total Haul Cycle time
- Empty Running Time
- Empty stop time
- Loading time
- Loaded running time
- Loaded stopped time
- Dumping time
- Loading start time
- Dumping start time
- Loaded haul distance
- Empty haul distance
- Loaded maximum speed
- Time when loaded maximum speed occurred
- Empty maximum speed
- Time when loaded maximum speed occurred
- Maximum + frame torque
- Time when the maximum + frame torque occurred
- Maximum - frame torque
- Time when the maximum - frame torque occurred
- Maximum sprung weight calculation
- Time when the maximum sprung weight calculation occurred
- Left Front Tire-kilometer-hour
- Right Front Tire-kilometer-hour
- Average Rear Tire-kilometer-hour
- Frame serial number
- Reserved 1-5, 7-10: These values are internal calculations used in the continued development of PLMIII and should be ignored.
- Reserved 6: This value is the payload estimate at the shovel just before the truck begins to move.

Alarm Records					
Alarm Type	Date Set	Time Set	Description	Date Cleared	Time Cleared
10	12/5/99	8:51:25 AM	INCL SENSOR LO	12/5/99	8:51:29 AM
10	12/5/99	8:56:07 AM	INCL SENSOR LO	12/5/99	8:56:12 AM
10	12/5/99	9:00:49 AM	INCL SENSOR LO	12/5/99	9:00:54 AM
10	12/5/99	9:05:31 AM	INCL SENSOR LO	12/5/99	9:05:36 AM
10	12/5/99	9:10:13 AM	INCL SENSOR LO	12/5/99	9:10:17 AM
10	12/5/99	9:14:54 AM	INCL SENSOR LO	12/5/99	9:14:59 AM
10	12/5/99	9:19:37 AM	INCL SENSOR LO	12/5/99	9:19:41 AM
10	12/5/99	9:24:19 AM	INCL SENSOR LO	12/5/99	9:24:24 AM
10	12/5/99	9:29:01 AM	INCL SENSOR LO	12/5/99	9:29:06 AM
10	12/5/99	9:33:44 AM	INCL SENSOR LO	12/5/99	9:33:48 AM
10	12/5/99	9:38:26 AM	INCL SENSOR LO	12/5/99	9:38:30 AM
10	12/5/99	9:43:08 AM	INCL SENSOR LO	12/5/99	9:43:13 AM
10	12/5/99	9:47:50 AM	INCL SENSOR LO	12/5/99	9:47:55 AM
10	12/5/99	9:52:32 AM	INCL SENSOR LO	12/5/99	9:52:37 AM
10	12/5/99	9:57:13 AM	INCL SENSOR LO	12/5/99	9:57:17 AM
10	12/5/99	10:01:55 AM	INCL SENSOR LO	12/5/99	10:01:59 AM

The second series of data below the haul cycle data is the alarms. The alarm columns, left to right are:

- The alarm type
- The date the alarm was set
- The time the alarm was set
- Alarm description
- The date the alarm was cleared
- The time the alarm was cleared

Compressed

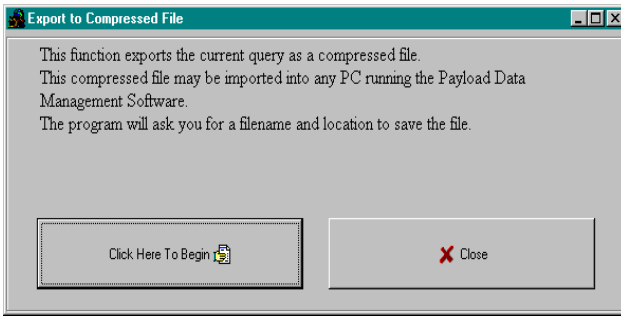

This export function allows the data from one laptop to be transferred to another computer. This can be useful when a service laptop is used to download multiple machines and transfer the data to a central computer for analysis. This can also be used to copy haul data from a particular truck onto a diskette for analysis.

The file format is a compressed binary form of the displayed query. The file can only be imported by another computer running the PDM Software.

To export data in ZIP format:

1. Confirm that the data displayed is the query data that needs to be exported.
2. From the payload summary screen, press the "EXPORT" button and select "To ZIP".
3. The program will ask for a filename and location.

Importing Data

This import function allows the data from one laptop to be transferred to another computer. This can be useful when a service laptop is used to download multiple machines and transfer the data to a central computer for analysis. This can also be used to copy haul data from a particular truck from a diskette into a database for analysis.

To import data, press the "IMPORT" button at the bottom of the “Payload Summary” screen. The program will ask for a ".zip" file to import, locate the file and press "Open". The program will only import ".zip" files created by another computer running the PDM Software.

Deleting Haul Cycle Records

To delete haul cycle records from the main database, press the "Delete" button at the bottom of the “Payload Summary” screen. The program will display a summary of the records from the displayed query. To delete a record, select one at a time and press the "Delete" button. It is recommended that records be exported to a zip file for archival purposes before deletion. Multiple records may be selected by holding down the Shift key. Pressing the "Delete All" button will select all the records from the current query and delete them.

NOTE: There is no recovery for records that have been deleted from the main database. It is highly recommended that all records be exported and archived in a compressed file format for future reference before being deleted.

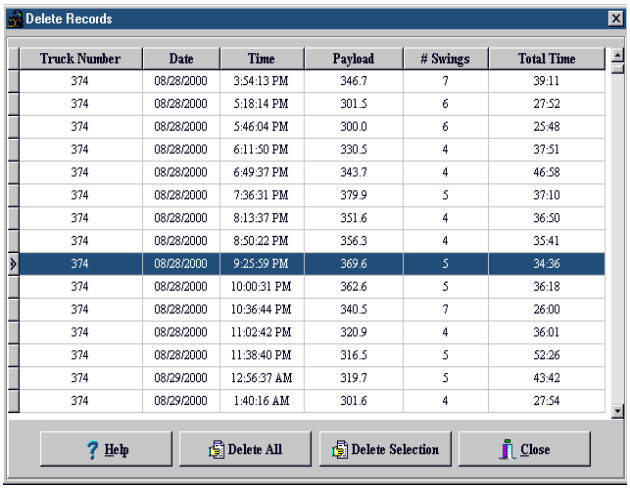

Truck Number	Date	Time	Payload	# Swings	Total Time
374	08/28/2000	3:54:13 PM	346.7	7	39:11
374	08/28/2000	5:18:14 PM	301.5	6	27:52
374	08/28/2000	5:46:04 PM	300.0	6	25:48
374	08/28/2000	6:11:50 PM	330.5	4	37:51
374	08/28/2000	6:49:37 PM	343.7	4	46:58
374	08/28/2000	7:36:31 PM	379.9	5	37:10
374	08/28/2000	8:13:37 PM	351.6	4	36:50
374	08/28/2000	8:50:22 PM	356.3	4	35:41
374	08/28/2000	9:25:59 PM	369.6	5	34:36
374	08/28/2000	10:00:31 PM	362.6	5	36:18
374	08/28/2000	10:36:44 PM	340.5	7	26:00
374	08/28/2000	11:02:42 PM	320.9	4	36:01
374	08/28/2000	11:38:40 PM	316.5	5	52:26
374	08/29/2000	12:56:37 AM	319.7	5	43:42
374	08/29/2000	1:40:16 AM	301.6	4	27:54

Viewing Alarms

From the Payload Summary screen, click the “Alarms” button to display the alarm screen. The alarms are sorted by the query settings from the Payload Summary screen. Alarms can be displayed as Active or Inactive.

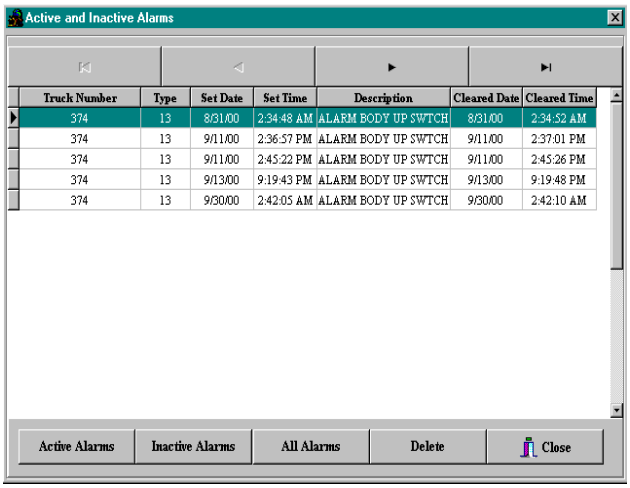

Deleting Alarm Records

To delete alarm records from the main database, press the "Delete" button at the bottom of the “Alarm Display” screen. The program will display a summary of the alarms from the query. To delete an alarm, select one at a time and press the "Delete" button. It is recommended that the query data be exported to a “.zip” file for archival purposes before deletion. Multiple records may be selected by holding down the Shift key. Pressing the "Delete All" button will select all the alarms from the current query and delete them.

NOTE: There is no recovery for alarms that have been deleted from the main database. It is highly recommended that all records be exported and archived in a compressed file format for future reference before being deleted.

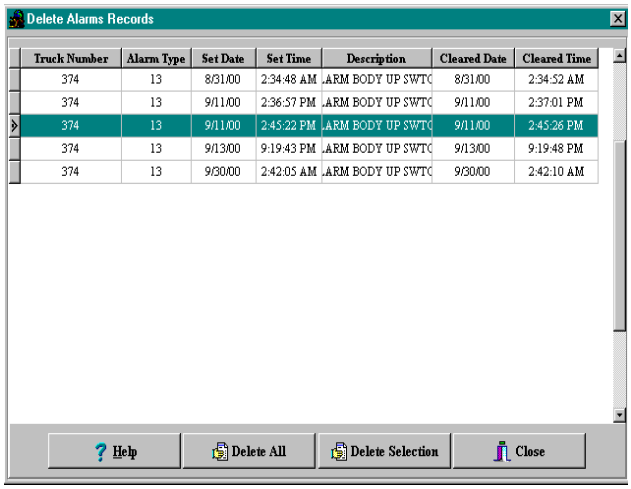

NOTES

NOTES

PORTIONS OF THIS PRODUCT RELATING TO PAYLOAD MEASURING SYSTEMS ARE MANUFACTURED UNDER LICENSE FROM

L.G. HAGENBUCH holder of
U.S. Patent Numbers 4,831,539 and 4,839,835

RADIO / CASSETTE PLAYER

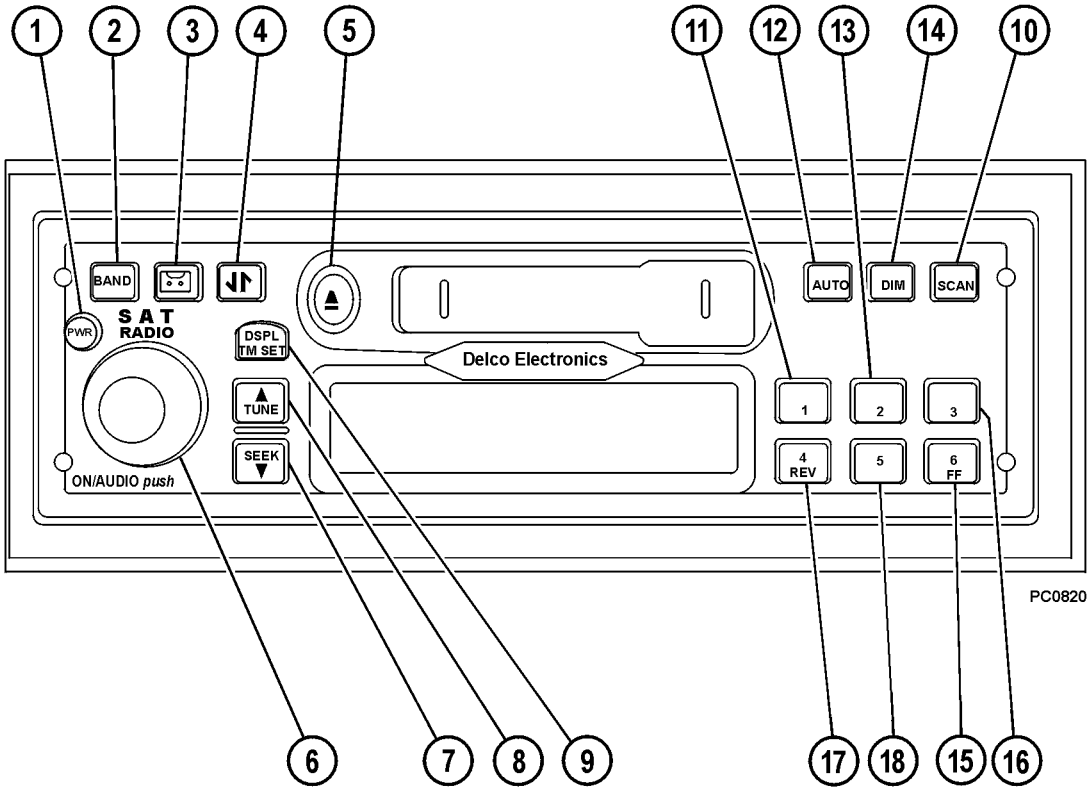

FIGURE 70-1. RADIO / CASSETTE PLAYER

GENERAL RECEIVER FUNCTIONS

Turning The Power On And Off

1. Turn the key switch to ON.
2. Press PWR (1, Figure 70-1) to turn the receiver on and off. Pushing ON/AUDIO (6) also turns the receiver power on.

Display

With the receiver off, the clock will be displayed. Momentarily pressing DSP/TM SET (9) with the receiver on will allow the operator to toggle between displays.

- When the receiver is in AM, FM1, FM2, or WX, the display will toggle between the frequency and the clock.
- When the receiver is in an active satellite mode and the provider is transmitting the available information, the display will toggle between the clock, frequency, station name, artist, song title and music type.
- When the receiver is in the cassette mode, the display will toggle between TP SIDE 1 or TP SIDE 2, and the clock.

Setting The Default Display

1. Press and hold DSPL/TM (9) for 2 seconds until the hour digits flash.
2. Press push-button 6/FF (15) to change the default display.

After 5 seconds of inactivity has elapsed, the selected default will display.

Adjusting Display Brightness

1. Press and hold DIM (14) until DIM appears on the display.
2. Rotate ON/AUDIO knob (6) clockwise or counterclockwise until the desired brightness is obtained.

SETTING THE TIME

1. Turn the key switch ON.
2. Press and hold DSPL/TM SET (9, Figure 70-1) for 2 seconds. When the number display flashes, time set mode is active.
3. Press ▲TUNE / SEEK▼ (7 & 8) to change the hour setting.
4. Press the DSPL/TM button to switch to minutes. The minute digits will flash when in this mode.
5. Press ▲TUNE / SEEK▼ to change the minute setting.

After 5 seconds of inactivity, the display will return to the default mode. The clock will now display the correct time of day.

OPERATING THE RADIO

BAND

Press BAND (2, Figure 70-1) to switch between FM1, FM2, AM, and WX Weather (US) and Satellite (XM1, XM2 or SR1, SR2). If a separate satellite receiver is not connected to your radio and operational, the satellite bands will not appear in the display.

▲TUNE/SEEK▼

▲TUNE (7) / SEEK▼ (8) allows you to move up or down in frequency to other stations. There are two modes of operation for finding other stations, manual tuning and seek mode.

Press and hold both ▲TUNE (8) and BAND (2) for 2 seconds to toggle between the two modes. The display will read either MANUAL or SEEK to indicate the mode the receiver is in.

Manual Tuning

Press ▲TUNE (8) to tune to the next higher frequency. Press SEEK▼ (7) to tune to the next lower frequency. Holding either of the buttons for more than 0.5 seconds will activate fast tuning for increased speed.

When in satellite mode, press and release either the ▲TUNE or the SEEK▼ buttons to navigate to the next channel. Pressing and holding either of the two buttons for more than 0.5 seconds will increase the cycle speed through the channels. The increase cycle speed is approximately 10 channels per second.

SEEK Mode

Hold either the ▲TUNE or SEEK▼ buttons for more than 0.5 seconds to enter the seek mode. SEEK will appear on the display when this mode is activated. In this mode, the radio will scroll through stations and stop on the next station with a strong signal.

NOTE: If the receiver can not find a strong enough signal after two band cycles, the seek mode will discontinue and the receiver will return to the initial starting point.

When in satellite mode, press ▲TUNE or SEEK▼ to navigate through the channels. Pressing and holding either of the two buttons for more than two seconds will increase the cycle speed through the channels. The increase cycle speed is approximately 10 channels per second.

SCAN

Press SCAN button (10) to scan all stations on the current band. When a strong frequency is found, the receiver will pause on that station for about 5 seconds and then continue scanning. Scan will appear on the display along with the frequency when this mode is active. To stop scanning, press the SCAN button again.

AUTO

AUTO (12) allows the receiver to store the 6 strongest stations onto push-buttons 1 through 6. Press AUTO until AUTO and AS appear on the display. The presets on the current band only will now be programmed with the 6 strongest frequencies. Presets on the other inactive bands will not be changed. Pressing AUTO again will delete the stations and default to the original preset stations.

NOTE: The AUTO function is not functional on the satellite band.

ADJUSTING THE RECEIVER SETTINGS

VOLUME: Rotate ON/AUDIO (6, Figure 70-1) knob clockwise to increase the volume and counter-clockwise to decrease the volume. VOL will be displayed along with the volume level.

BASS: Push and release ON/AUDIO (6) knob until BASS and the current bass level is displayed. Rotate the knob clockwise to increase the bass and counter-clockwise to decrease the bass.

TREBLE: Push and release ON/AUDIO (6) knob until TREB and the current treble level is displayed. Rotate the knob clockwise to increase the treble and counter-clockwise to decrease the treble.

FADE: Push and release ON/AUDIO (6) knob until FADE and the current level is displayed. Rotate the knob clockwise to move the sound to the front speakers and counter-clockwise to move the sound to the rear speakers.

BALANCE: Push and release ON/AUDIO (6) knob until BAL and the present level is displayed. Rotate the knob clockwise to move the sound to the right speakers and counter-clockwise to move the sound to the left speakers.

SPEAKER: Push and release ON/AUDIO (6) knob until SPKR and the current setting is displayed. Rotate the ON/AUDIO knob to select 2-speaker or 4-speaker operation. When 2-speaker operation active, the rear speakers are muted and the FADE option will not appear on the menu.

PROGRAMMING PRESET STATIONS

Presets are stations that are stored on each of the 6 push-buttons. After a station has been programmed into one of the preset buttons, pushing the preset provides a quick return to that station. The six buttons can each store a preset channel per band.

NOTE: The receiver is equipped with two FM radio bands: FM1 and FM2. The two bands are identical. However, each one allows the operator to set 6 preset channels for a total of 12 FM presets.

Perform the following steps to program the presets:

1. Turn the receiver ON.
2. Select the band and the desired station.
3. Press and hold one of the six push-buttons for at least 2 seconds. During the 2 second period, receiver output will be muted and the push-button number will not show on the display. When the station has been committed to memory, the audio and the preset icon will return.

OPERATION OF THE WEATHERBAND (U.S.)

NOAA - Weather Radio is a service of the National Weather Service. It provides continuous broadcasts of the latest weather information directly from the National Weather Service offices. Taped weather messages are repeated every four to six minutes and are routinely revised every one to three hours, or more frequently if needed. Most of the stations operate 24 hours, daily.

The weather for the area you are in may be found on one of 7 stations. When in the Weatherband mode, the display will show the WX icon and CHAN # to indicate the channel. The channel may be adjusted through the ▲TUNE /SEEK▼ buttons, and may be preset as in the radio mode.
The frequency associated with each channel is as follows:

1. 162.550 MHz
2. 162.400 MHz
3. 162.475 MHz
4. 162.425 MHz
5. 162.450 MHz
6. 162.500 MHz
7. 162.525 MHz

The National Weather Service operates approximately 372 stations. Close to 90 percent of the nation's population is within the listening range of a NOAA Weather Radio broadcast.

SATELLITE RADIO

To use the satellite radio function on your radio, a subscription must be ordered from a provider. There are currently two providers in the U.S.: XM and Sirius Satellite Radio. When a subscription is ordered, you will need to get an additional receiver and antenna from your provider.

To activate the external satellite receiver, you must supply the provider with your Electronic Serial Number (ESN). To find the ESN, first install the satellite receiver per the instructions from the your provider. Next, follow the instructions below.

XM Satellite Radio:

1. Turn both the radio and the satellite receiver on. Press the BAND button on the radio and select either XM1 or XM2.
2. Tune your satellite receiver to channel 0 to see the ESN display.

   Record the ESN.

   The display will return to the default setting after 5 seconds.

Sirius Satellite Radio:

1. Turn the radio on and with the display showing the clock, press and hold the DSPL/TM SET button until the hours segment is flashing.
2. Press the BAND button and the ESN will be displayed.

   Record the ESN.

   The display will return to the default setting after 5 seconds.

NOTE: Only one satellite receiver can be installed and connected to your receiver at one time.

NOTE: Obstructions in the satellite signal may impair your satellite radio reception. Contact your provider for satellite radio reception problems.

Operating Satellite Radio

1. Use the BAND button to select the proper satellite radio band. (XM1, XM2, SR1, SR2)
2. Use the ▲TUNE and SEEK▼ buttons to navigate through the channels.

Program Type Search (PTY)

XM and Sirius both allow you to search by music type. Program Type Search (PTY) allows you to perform a music search by type. Perform the following steps in order to do a PTY search.

1. Press SCAN and push-button 1 at the same time. PTY will appear on the display.
2. Continue to press push-button 1 until the desired genre of programming is displayed.
3. Once the desired genre has been selected, press the ▲TUNE and SEEK▼ buttons to scroll through the different channels in that genre. Station names will appear on the display as your scroll.

   You may also scan through the channels using the scan feature. Press the SCAN button to begin scanning the channels. Press the SCAN button again to stop at the desired channel.

CASSETTE PLAYER

The cassette player that the radio is equipped with works best with cassettes that range from 30 to 90 minutes long. Cassettes that are longer than 90 minutes have thinner tape, and do not work well in this model cassette player.

It is also important to only use cassettes that are in good condition. Cassettes that are dirty, damaged, or have been exposed to excessive heat and/or sunlight could cause damage to the cassette player and possible failure.

The cassette player is equipped with automatic equalization and metal tape sensing functions. An M will appear on the display when a metal tape is sensed.

Cleaning the cassette player is a recommended maintenance item. It should be performed at 35 hour (cassette play) intervals. Failure to clean the cassette player may diminish sound quality and cause cassette player failure.

Playing A Cassette

1. Turn the receiver ON.
2. Insert a cassette into the player. The cassette icon will appear on the display. The tape will begin to play when the icon appears.

   Press button (3, Figure 70-1) to change from the radio to a cassette. TP SIDE 1 or TP SIDE 2 will appear on the display depending on which side of the cassette is currently being played. If a cassette is not loaded in the player, NO TAPE will appear on the display.

NOTE: A tape may be inserted when the receiver is off by pressing the eject button and inserting the tape within 25 seconds.

Cassette Functions

4/REV (17): This button rewinds the cassette. The cassette will continue to rewind until the button is pressed again, or until the cassette reaches the end of the tape. <REW will appear on the display as the cassette is rewinding.

6/FF (15): This button fast forwards the cassette. The cassette will continue to fast forward until the button is pressed again, or until the cassette reaches the end of the tape. FWD> will appear on the display as the cassette is fast forwarding.

Eject (5): Press this button to eject the cassette from the player. When the eject button is held, it acts as a stop button.

(4): This button causes the cassette player to reverse directions and play the opposite side of the cassette. Pressing the button a second time will reverse the cassette back to the original side.

NOTE: The cassette will automatically flip to the opposite side when the end of the tape is reached.

Progrommable Eject Default

The cassette player has been pre-programmed to return to the radio after a tape has been ejected. This default may be changed to an “eject audio mute” mode. This mode will mute the radio after a cassette has been ejected. When this occurs, “NO TAPE” will appear on the display and the radio will remain muted until BAND (2) is pressed. Pressing this button will enable the radio.

Perform the following steps to change the eject default mode:

1. Press and hold DSP/TM SET (9, Figure 70-1) for at least 2 seconds until the hour digits flash.
2. Press button (3) to toggle between “P.PLAY” and “EJMUTE”. After 5 seconds of inactivity, the receiver will return to the default display.

Bad Tape Detect

If the receiver detects a bad cassette, “BAD TAPE” will appear on the display and the tape will be ejected. If this occurs, the cassette should be removed from the player and should not be re-inserted.

To use a cleaning tape or a CD adapter in the cassette player, the bad tape detector must be turned off. Perform the following steps to disable this mode:

1. Turn off receiver and turn key switch to OFF.
2. Press and hold button (3) for 5 seconds. “BAD TAPE DETECT OFF” will appear on the display. When this is displayed, the detector has been disabled.

   Repeat this procedure to reactivate the bad tape detector. “BAD TAPE DETECT ON” will appear on the display after the detector has been activated.

Cleaning The Cassette Player

After 35 hours of cassette play, the display will read TP CLEAN for 5 seconds. This indicates that it is time to clean the cassette player.

1. Turn key switch to ON and turn off receiver.
2. Disable BAD TAPE DETECT mode. Press and hold button (3, Figure 70-1) for 5 seconds. “BAD TAPE DETECT OFF” will appear on the display. When this is displayed, the detector has been disabled.
3. Turn the receiver on.
4. Insert a wet-type, non-abrasive, scrubbing cassette cleaner. Follow the instructions provided with the cleaner.
5. Reset the clean tape timer. With the receiver on, press and hold the eject button for 5 seconds. TP CLEAN will appear on the display and the tape icon will flash after 3 seconds has elapsed. After 5 seconds CLN RST will appear on the display. When this occurs, the clean tape timer will be reset to zero hours. If the button was released before CLN RST was displayed, the timer will not be reset.

NOTES:

NOTES: